KING STEEL

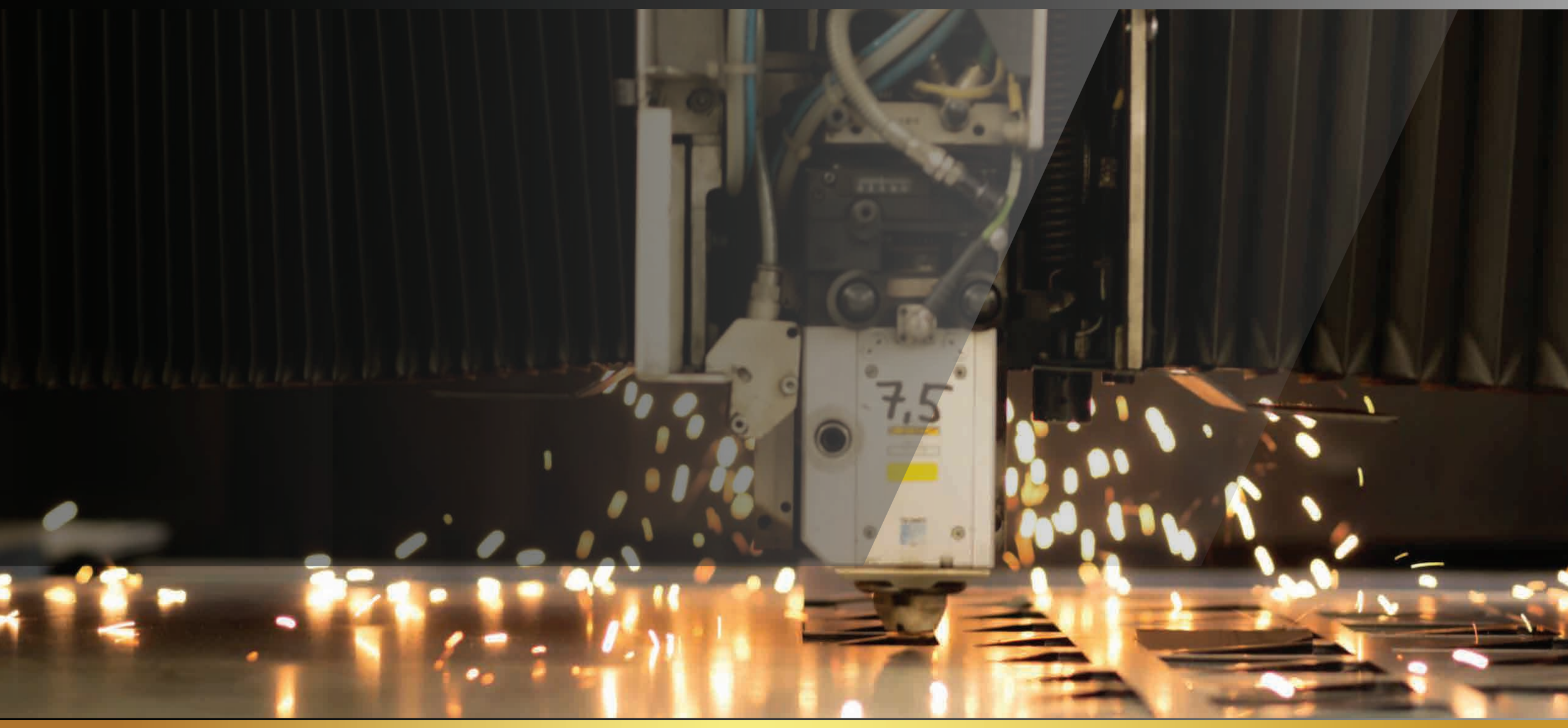

MORE THAN 25 YEARS OF EXPERIENCE

www.kingsteelegypt.com

KING STEEL

www.kingsteelegypt.com

KING STEEL

Laser Cutting Doors

INTRODUCTION

KING STEEL

- شركة كينج ستيل واحدة من اهم الشركات العاملة فى مجالات تشكيل وتقطيع المعادن بالليزر وانتاج حوامل الكابلات فى مصر والشرق الاوسط

- خبرة اكثر من ٢٥ عاما فى مجالات تشكيل المعادن باستخدام احدث الاجهزة الحديثة والمتطورة

King Steel Company is one of the most active companies in the areas of forming and laser cutting meatals and production of cable trays in egypt and the middle East .,

More than 25 years of experience in the field of metal forming using the most modern and sophisticated equipment

LASER CUTTING

تقطيع الليزر

يوجد لدى شركة كينج ستيل احدث الاجهزة الحديثة لتقطيع المعادن بالليزر لجميع مقاسات وسماكات المواد فى اقل وقت ممكن

Laser Cutting

King Steel Inc. has the latest laser devices and metal stamping of all sizes and thicknesses material in the shortest possible time

INDEX

Cable Trays	5 - 8
Standard cable tray dimensions	6
Standard cable tray horizontal bend 90 connection	6
Standard cable tray horizontal bend 45 connection	7
Standard cable tray horizontal reducer connection	7
Standard cable tray horizontal tee connection	8
Standard cable tray horizontal X connection	8
Cable Trunks	9 - 12
Standard cable trunk dimensions	10
Standard cable trunk horizontal bend 90 connection	10
Standard cable trunk horizontal bend 45 connection	11
Standard cable trunk horizontal reducer connection	11
Standard cable trunk horizontal tee connection	12
Standard cable trunk horizontal X connection	12
Cable Ladders	13 - 17
Standard cable ladder dimensions	14
Standard cable ladder horizontal bend 90 connection	14
Standard cable ladder horizontal bend 45 connection	15
Standard cable ladder horizontal reducer connection	15
Standard cable ladder horizontal tee connection	16
Standard cable ladder horizontal X connection	16
Standard cable ladder vertical bend 90 connection	17
Cable Support System	18 - 98
Spring Nut	20
Ladder Clamp	20
Gouset Single	20
Gousser Double	20
Single Channel Support	21
Double Channel Support	21
Light KZ Support Light	21
KZ Support Bracket	22
Medium Duty EDF Support	22
Medium Duty EDF Support with H.P	22
Medium Duty EDF Support Bracket	23
Heavy Duty I Support	23
Heavy Duty I Support Head Plate	23
Heavy Duty I Support Bracket	24
I Support Connector	24
I Support Plate	24
Heavy Duty U Support	24
Heavy Duty U Support with Head Plate	25
Heavy Duty U Support Bracket (Wall Bracket)	25
Heavy Duty U Support Head Plate	25
Connectors	26
Accessories	27
Support Profilet	28
Technical Data	29 - 33
Cable tray capacity with cover	34 35

KING STEEL

www.kingsteelegypt.com

CABLE TRAYS

Standard Cable Tray Dimension 8
Standard Cable Tray Horizontal Bend 90 Connection 8
Standard Cable Tray Horizontal Bend 45 Connection 9
Standard Cable Tray Horizontal Reducer Connection 9
Standard Cable Tray Horizontal Tee Connection 10
Standard Cable Tray Horizontal X Connection 10

CABLE TRAYS

Cable trays

Standard cable Tray Dimension
Standard Cable Tray horizontal Bend go Connection

Standard Cable Tray Dimensions

Type	Surface Coating	Flange Type	Width Wmm	Height Hmm	Thickness mm	Length mm	Cover
SPG	Pre-Galvanized		050				
SHD	Hot-Dip Galvanized		100	25	1.0		On request
SPP	Pre-Galvanized	N	150 200	50	1.25	2000	1.25mm
	+Electrostatic paint finally Coating	F	250	75	1.5	2500	Thickness
SHP	Hot-Dip Galvanized	R	300 350	100	2.0	3000	2000mm
	+Electrostatic paint finally Coating		400 450 500				length
SSS	Stainless steel		600				

Code	Type	Flange	Width	height	thick
Example	SHD	F	40	100	A

code	Thick
A	1.0
B	1.25
C	1.5
D	2.0

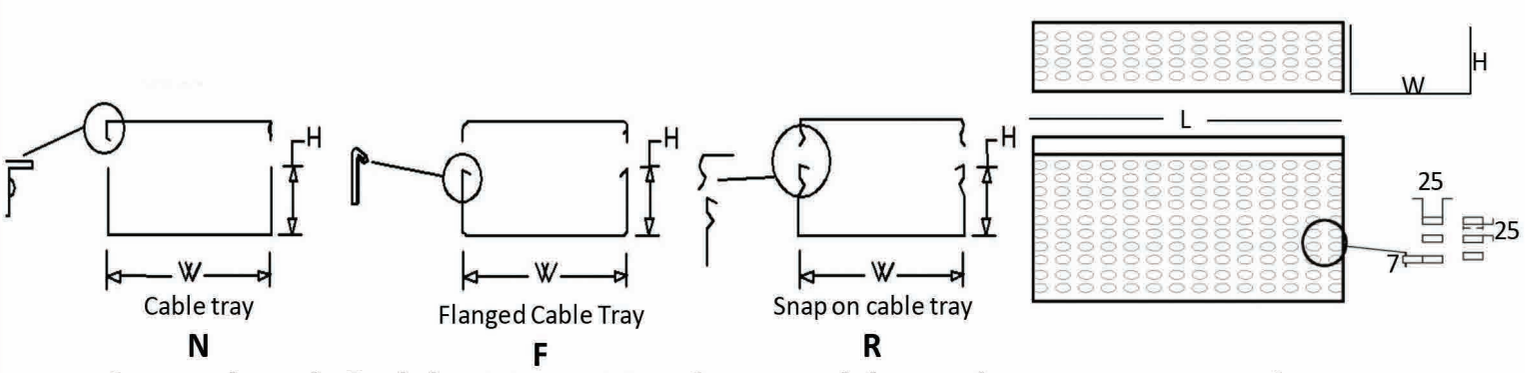

Standard Cable Tray Horizontal bend go connection

STRAIGHT ELEMENT

- Material. (steel , stainless steel and aluminum)
- Finish.

1. Hot- dip galvanized after fabrication according to DIN 50976 –zinc coating thickness on one side 50-60 µm (350-420 gm²).
2. Pre galvanized according to DIN 17162 on both sides 275 gm/m².
3. P. v. c coated.
4. Epoxy

- 45 & 60 & 90 & 110 mm Standard side of height.
- 2000 & 3000 mm Standard Length.
- All Dimensions in (mm)

CABLE TRAYS

STRAIGHT ELEMENT

type	Width (b)	Thick (t)	Weight Kg/mt	Description
C1	50	1.0	1.01	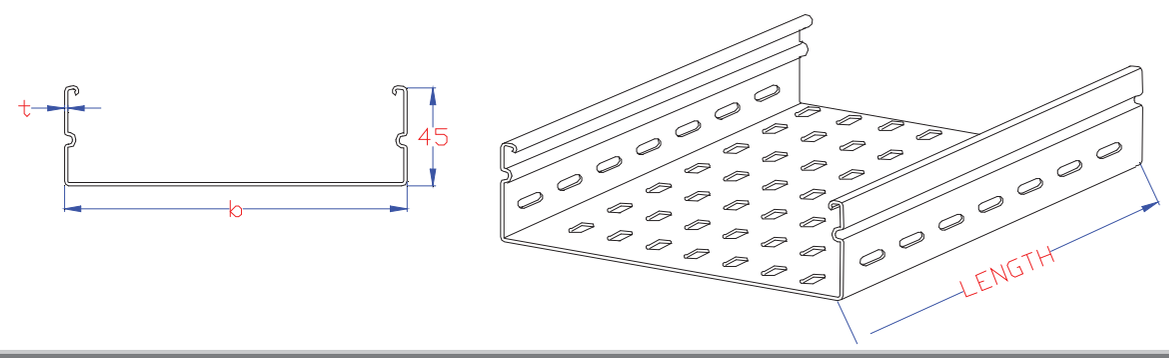
C2	100	1.0	1.33	
C3	200	1.0	1.97	
C4	300	1.0	2.62	
C5	100	1.0	1.80	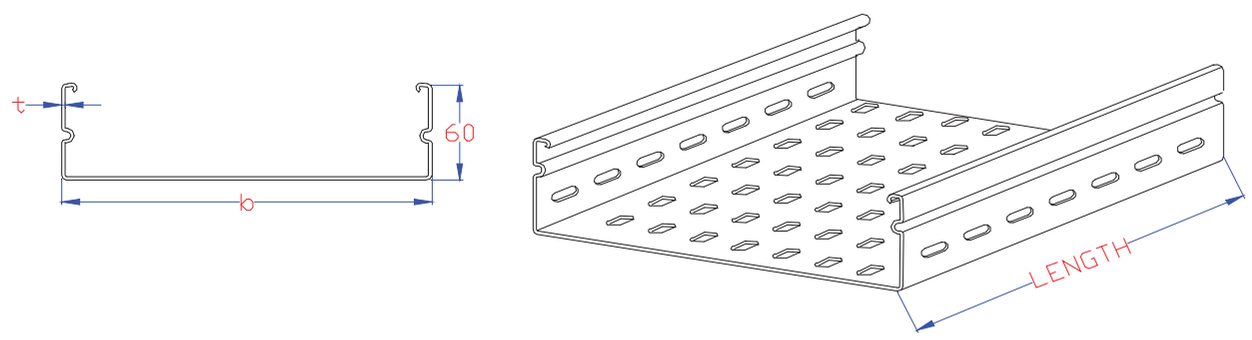
C6	200	1.0	2.72	
C7	300	1.0	3.58	
C8	400	1.5	6.03	
C9	500	1.5	6.73	
C10	600	1.5	7.91	
C11	100	1.5	3.63	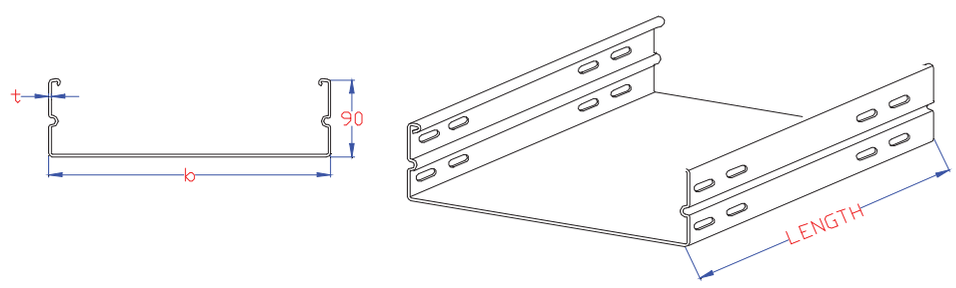
C12	200	1.5	4.16	
C13	300	1.5	5.16	
C14	400	1.5	6.16	
C15	500	1.5	7.16	
C16	600	1.5	8.16	
C17	100	1.5	3.83	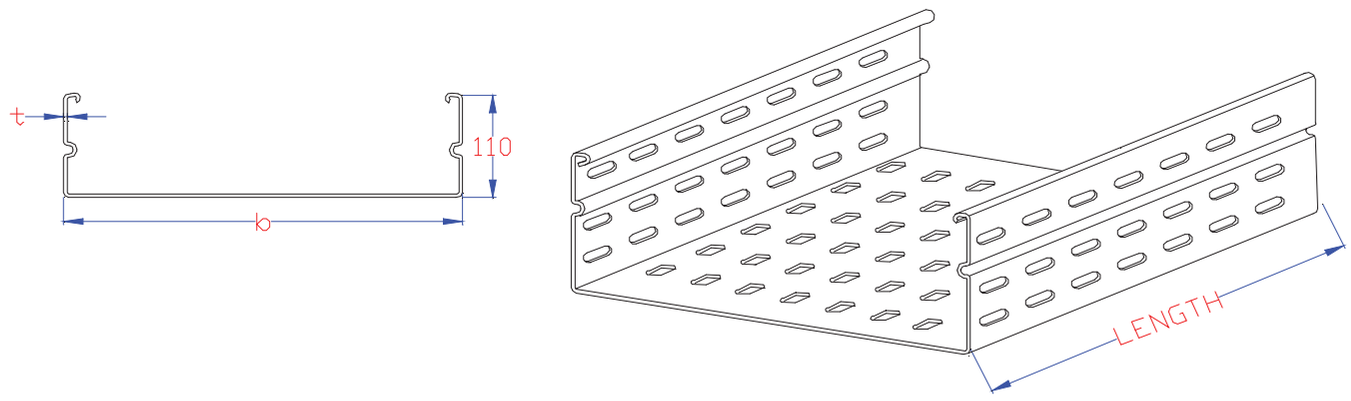
C18	200	1.5	4.67	
C19	300	1.5	5.70	
C20	400	1.5	6.73	
C21	500	1.5	7.25	
C22	600	1.5	7.77	

Standard Cable Tray Horizontal Bend 45 connection

Type	Surface Coating	Flange Type	Width W1mm	Width W2mm	Height mm	Thickness mm	Cover
VPG	Pre-Galvanized		050	050	25	1.0	
VHD	Hot-Dip Galvanized		100 150	100 150	50	1.25	
VPP	Pre-Galvanized	N	200	200	75	1.5	On request
	+Electrostatic paint finally Coating	F	250	250	100	2.0	1.25
VHP	Hot-Dip Galvanized	R	300 350	300 350			thickness
	+Electrostatic paint finally Coating		400 450 500	400 450 500			
VSS	Stainless steel		600	600			

Code	Type	Flange	Width1	width2	hight	thick
Example	VPG	F	40	30	100	D

code	Thick
A	1.0
B	1.25
C	1.5
D	2.0

For curved type add C after code **

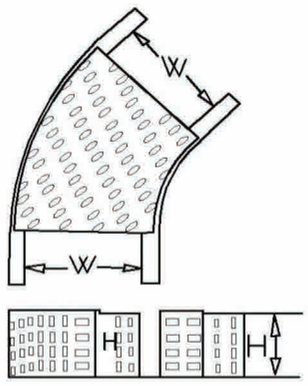

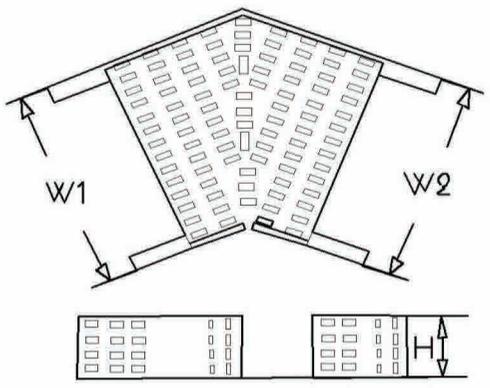

Standard Cable Tray Horizontal Reducer Connection

Type	Surface Coating	Flange Type	Width W1mm	Width W2mm	Height mm	Thickness mm	Reducer Dir.	Cover
RPG	Pre-Galvanized		050	050	25			
RHD	Hot-Dip Galvanized		100 150	100 150	50	1.0		
RPP	Pre-Galvanized	N	200	200	75	1.25	L	On request
	+Electrostatic paint finally Coating	F	250	250	100	1.5	R	1.25mm
RHP	Hot-Dip Galvanized	R	300 350	300 350		2.0	M	thickness
	+Electrostatic paint finally Coating		400 450 500	400 450 500				
RSS	Stainless steel		600	600				

Code	Type	Flange	Width1	width2	hight	Dir	thick
Example	RPG	F	30	30	50	L	A

code	Thick
A	1.0
B	1.25
C	1.5
D	2.0

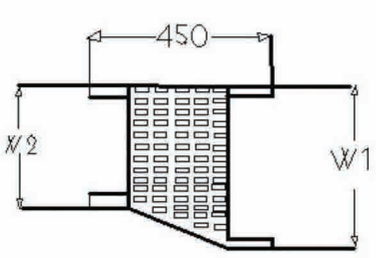

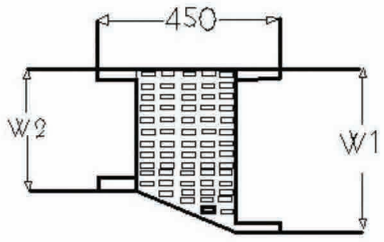

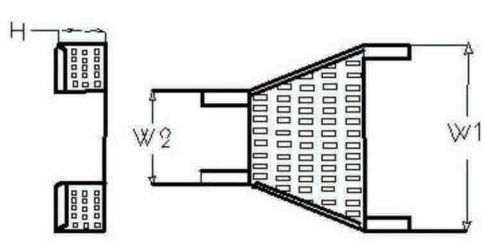

Cable trays

Standard Cable Tray Horizontal Bend 45 connection
Standard Cable Tray Horizontal Reducer Connection

Standard Cable Tray Horizontal Bend 45 connection

Type	Surface Coating	Flange Type	Width W1mm	Width W2mm	Width W3mm	Height mm	Thickness mm	Cover
TPG	Pre-Galvanized		050	050	050			
THD	Hot-Dip Galvanized		100	100	100	25	1.0	
			150	150	150			
TPP	Pre-Galvanized	N	200	200	200	50	1.25	On request
	+Electrostatic paint finally Coating	F	250	250	250	75	1.5	1.25
THP	Hot-Dip Galvanized	R	300	300	300	100	2.0	thickness
			350	350	350			
			400	400	400			
	+Electrostatic paint finally Coating		450	450	450			
			500	500	500			
Tss	Stainless steel		600	600	600			

Code	Type	Flange	Width1	width2	Width3	hight	thick
Example	TPG	F	30		30	100	A

code	Thick
A	1.0
B	1.25
C	1.5
D	2.0

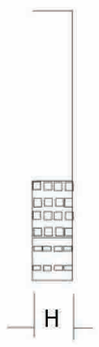

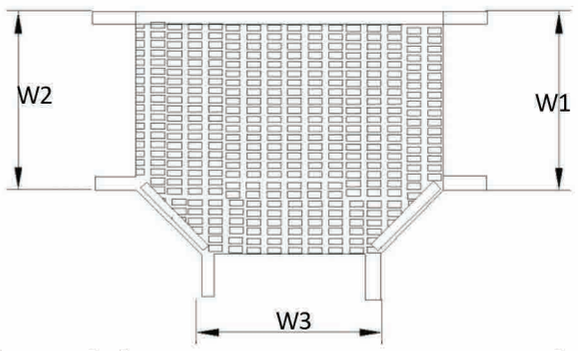

Standard Cable Tray Horizontal Reducer Connection

Type	Surface Coating	Flange Type	Width W1mm	Width W2mm	Width W3mm	Width W4mm	Thickness mm.	Cover
XPG	Pre-Galvanized		050	050	050	050		
XHD	Hot-Dip Galvanized		100	100	100	100		
			150	150	150	150		
XPP	Pre-Galvanized	N	200	200	200	200	L	On request
	+Electrostatic paint finally Coating	F	250	250	250	250	R	1.25mm
XHP	Hot-Dip Galvanized	R	300	300	300	300	M	thickness
			350	350	350	350		
			400	400	400	400		
	+Electrostatic paint finally Coating		450	450	450	450		
			500	500	500	500		
XSS	Stainless steel		600	600	600	600		

Code	Type	Flange	Width1	Width2	Width3	Width4	Hight	thick
Example	RPG	F	20	05	20	05	50	A

code	Thick
A	1.0
B	1.25
C	1.5
D	2.0

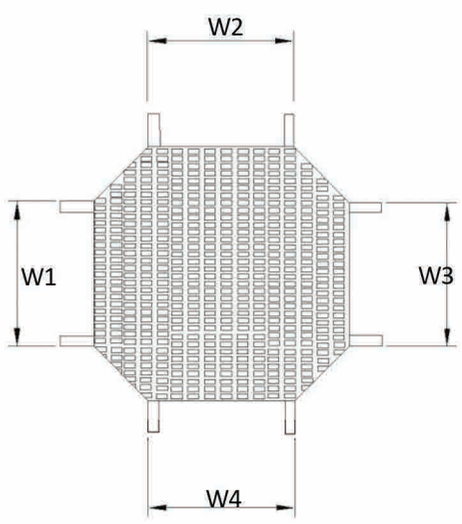

Hoy-Dip Galvanized acc to DIN 50976.
Pre-Galvanized acc to DIN EN 10142

CABLE TRAY FITTINGS

horizontal ELBOW 90 ^{0}

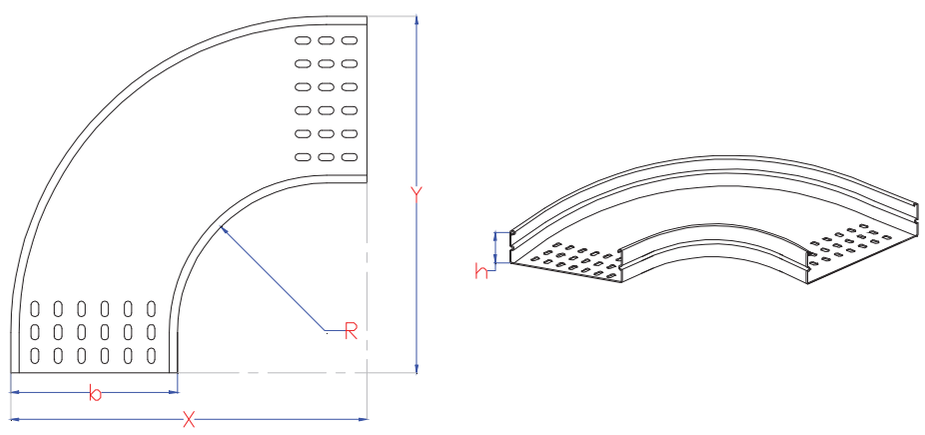

Width (b)	OVERALL DIM. X X Y	radius (R)
50	290 x 290	140
100	340 x 340	140
200	440 x 440	140
300	640 x 640	240
400	740 x 740	240
500	840 x 840	240
600	940 x 940	240

Horizontal ELBOW 45 ^{0}

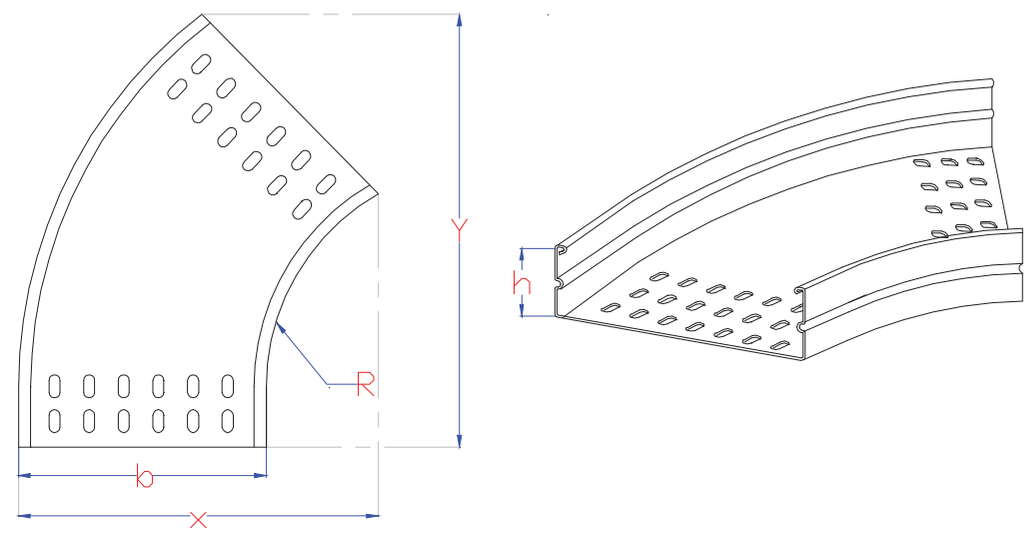

Width (b)	OVERALL DIM. X X Y	radius (R)
50	161.7 x 305.1	140
100	211.7 x 340.4	140
200	311.7 x 411.2	140
300	441.2 x 552.5	240
400	541.2 x 623.3	240
500	641.2 x 694	240
600	741.2 x 764.7	240

INSIDE ELBOW 90 ^{0}

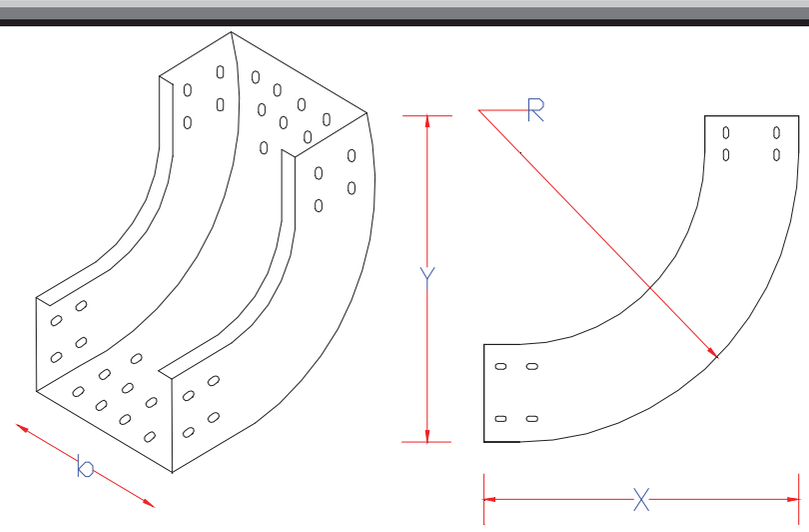

Width (b)	OVERALL DIM. X x Y	radius (R)
50	240 x 240	140
100	240 x 240	140
200	240 x 240	140
300	340 x 340	240
400	340 x 340	240
500	340 x 340	240
600	340 x 340	240

INSIDE ELBOW 45 ^{0}

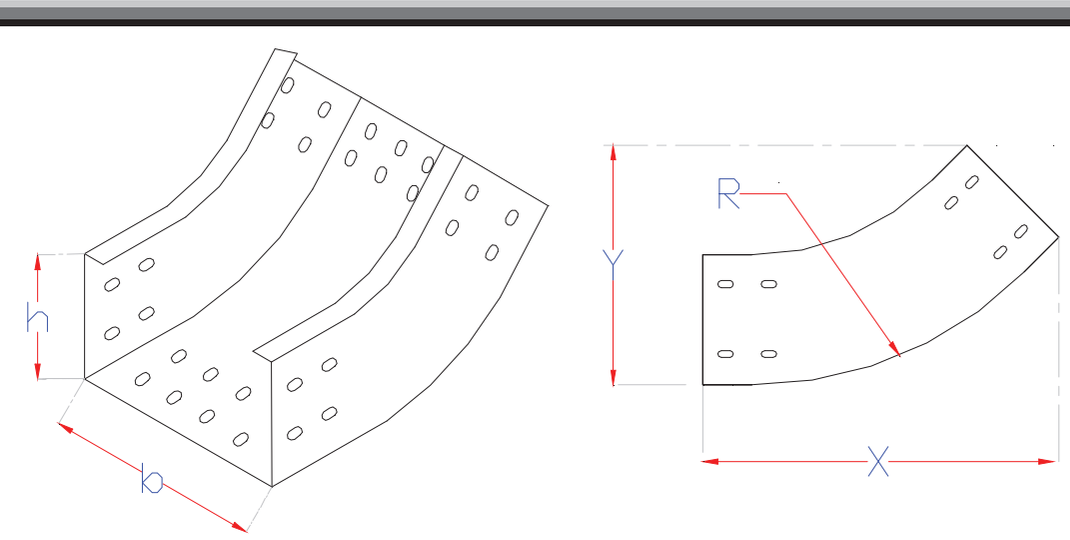

Height (h)	OVERALL DIM. X x Y	radius (R)
45	151.7 x 297.6	140
60	171.7 x 312.2	140
90	201.7 x 333.1	140
110	221.7 x 347.2	140
45	181 x 368.7	240
60	201 x 382.8	240
90	231 x 404.1	240
110	251 x 418.2	240

OUTSIDE ELBOW 90

DESCRIPTION

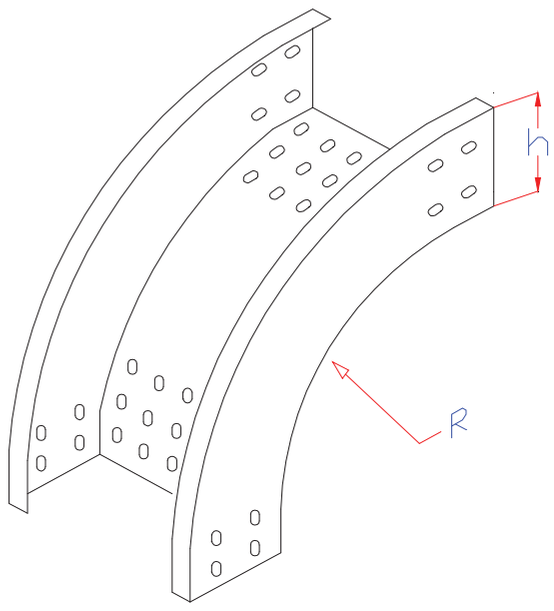

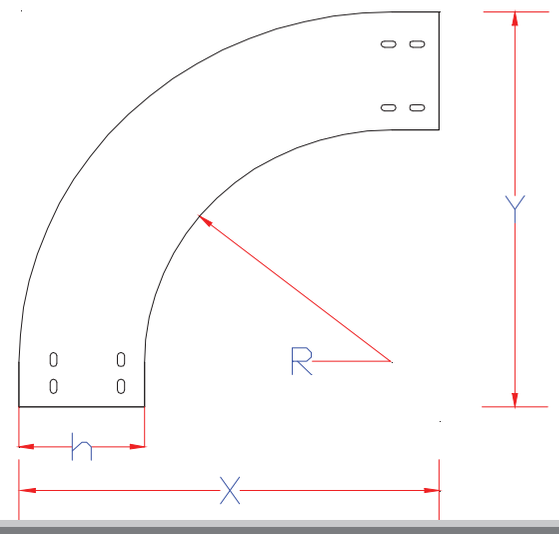

height (h)	*Width* (b)	*OVERALL DIM.* *X* x *Y*	radius (r)	height (h)	*Width* (b)	*OVERALL DIM.* *X* x *Y*	radius (r)
Height = 45 mm	50	285 x 285	140	***Height = 60 mm***	50	300 x 300	140
	100	285 x 285	140		100	300 x 300	140
	200	285 x 285	140		200	300 x 300	140
	300	385 x 385	240		300	400 x 400	240
	400	385 x 385	240		400	400 x 400	240
	500	385 x 385	240		500	400 x 400	240
	600	385 x 385	240		600	400 x 400	240
Height = 90 mm	50	330 x 330	140	***Height = 110 mm***	50	350 x 350	140
	100	330 x 330	140		100	350 x 350	140
	200	330 x 330	140		200	350 x 350	140
	300	430 x 430	240		300	450 x 450	240
	400	430 x 430	240		400	450 x 450	240
	500	430 x 430	240		500	450 x 450	240
	600	430 x 430	240		600	450 x 450	240

OUTSIDE ELBOW 45 ^{0}

height (h)	*OVERALL DIM.* *X* x *Y*	radius (r)	DESC RIPTION
40	151.7 x 298	140	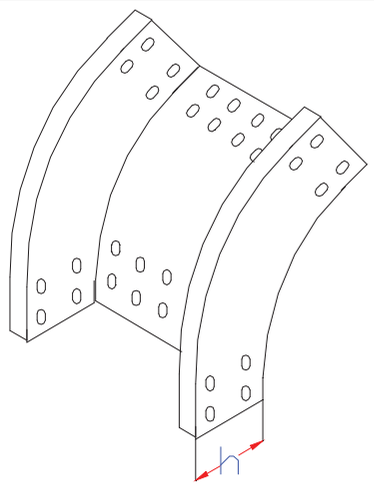 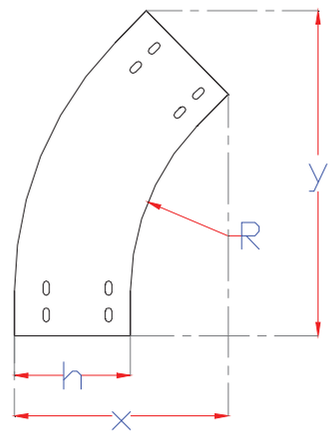
60	171.7 x 312.2	140	
90	201.7 x 333.3	140	
110	221.7 x 347.2	140	
40	181 x 368.7	240	
60	201 x 382.8	240	
90	231 x 404.1	240	
110	251 x 418.2	240	

TEES

Width (P)	OVERALL DIM. X x Y	radius (R)	DESCRIPTION
50	530 x 290	140	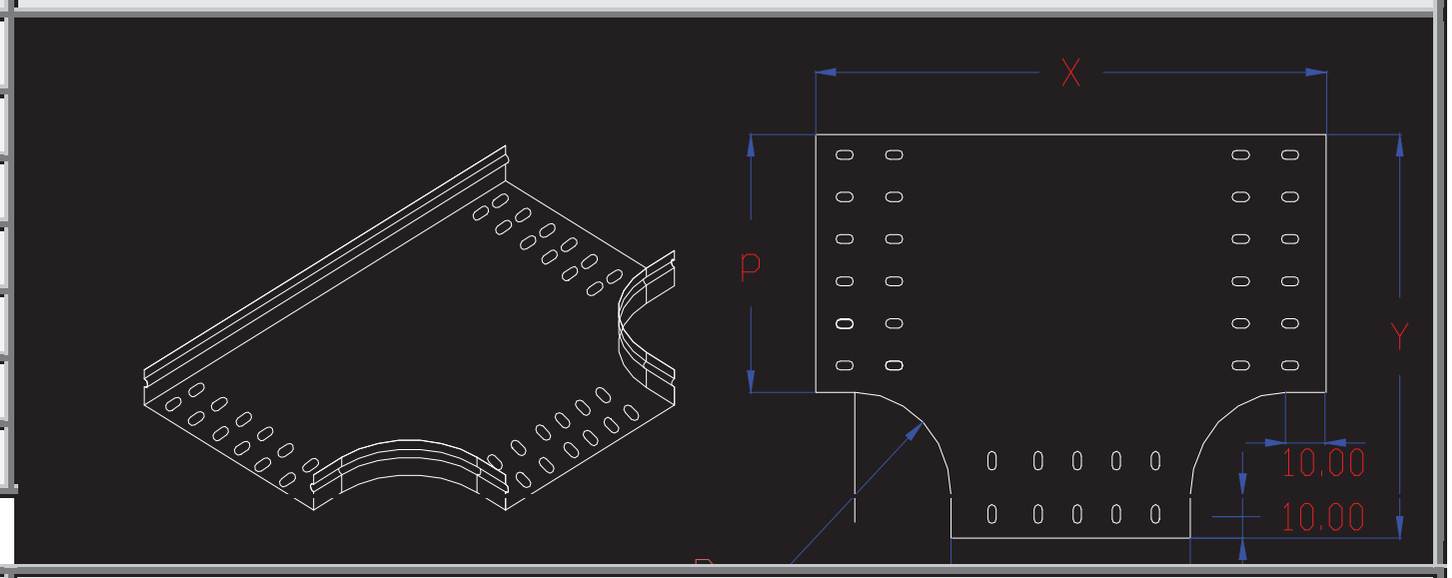
100	580 x 340	140	
200	680 x 440	140	
300	980 x 640	240	
400	1080 x 740	240	
500	1180 x 840	240	
600	1280 x 940	240	

OFFSET.

Width (P)	OVERALL DIM. X x Y	radius (R)	DESCRIPTION
50	550 x 250	140	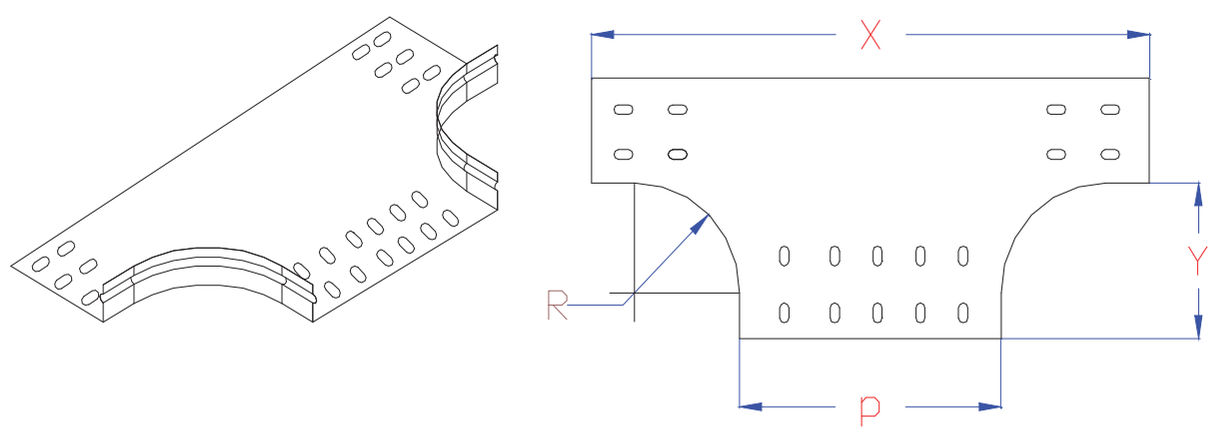
100	600 x 250	140	
200	700 x 250	140	
300	1000 x 350	240	
400	1100 x 350	240	
500	1200 x 350	240	
600	1300 x 350	240	

CROSS.

Width (P)	OVERALL DIM. X x Y	radius (R)	DESCRIPTION
50	530 x 530	140	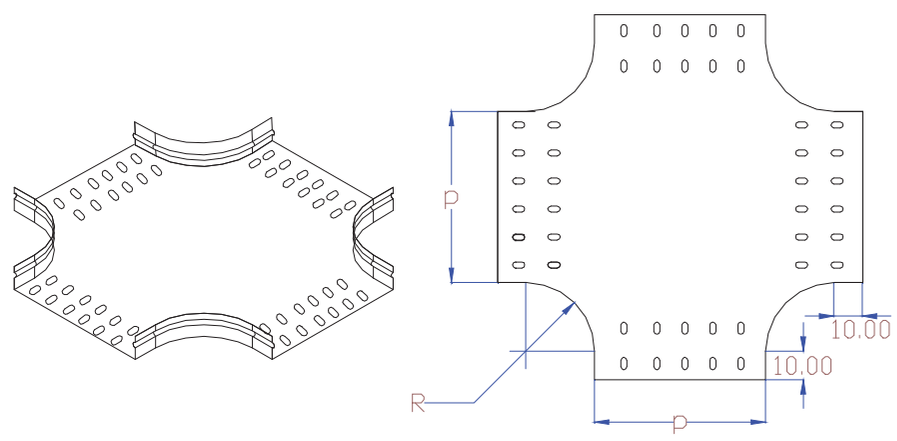
100	580 x 580	140	
200	680 x 680	140	
300	980 x 980	240	
400	1080 x 1080	240	
500	1180 x 1180	240	
600	1280 x 1280	240	

Off-set reducers

Width mm.	OVERALL DIM. X x Y	DESCRIPTION
200/100	200 x 500	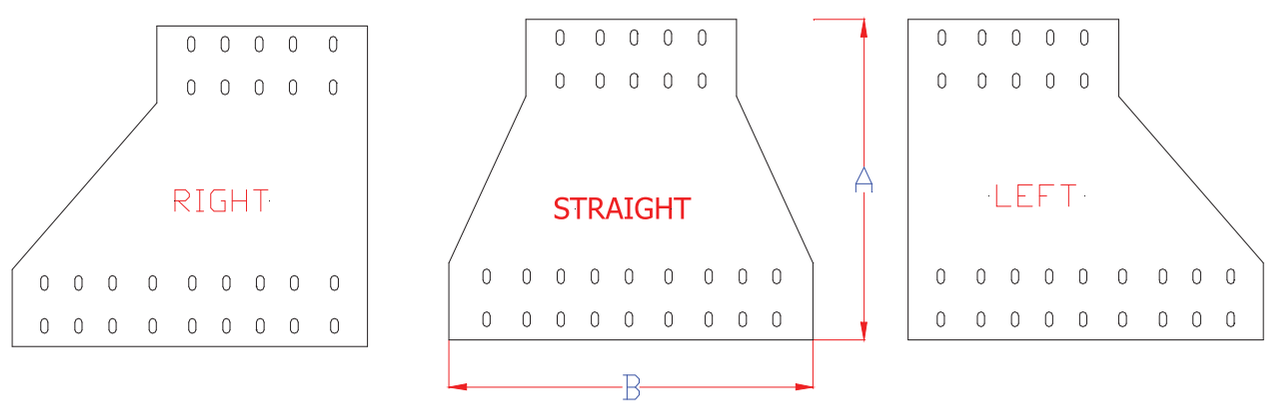
300/...	300 x 500	
400/...	400 x 500	
500/...	500 x 500	
600/...	600 x 500	
700/...	700 x 500	
800/...	800 x 500	

VERTICAL TEE.

DESCRIPTION
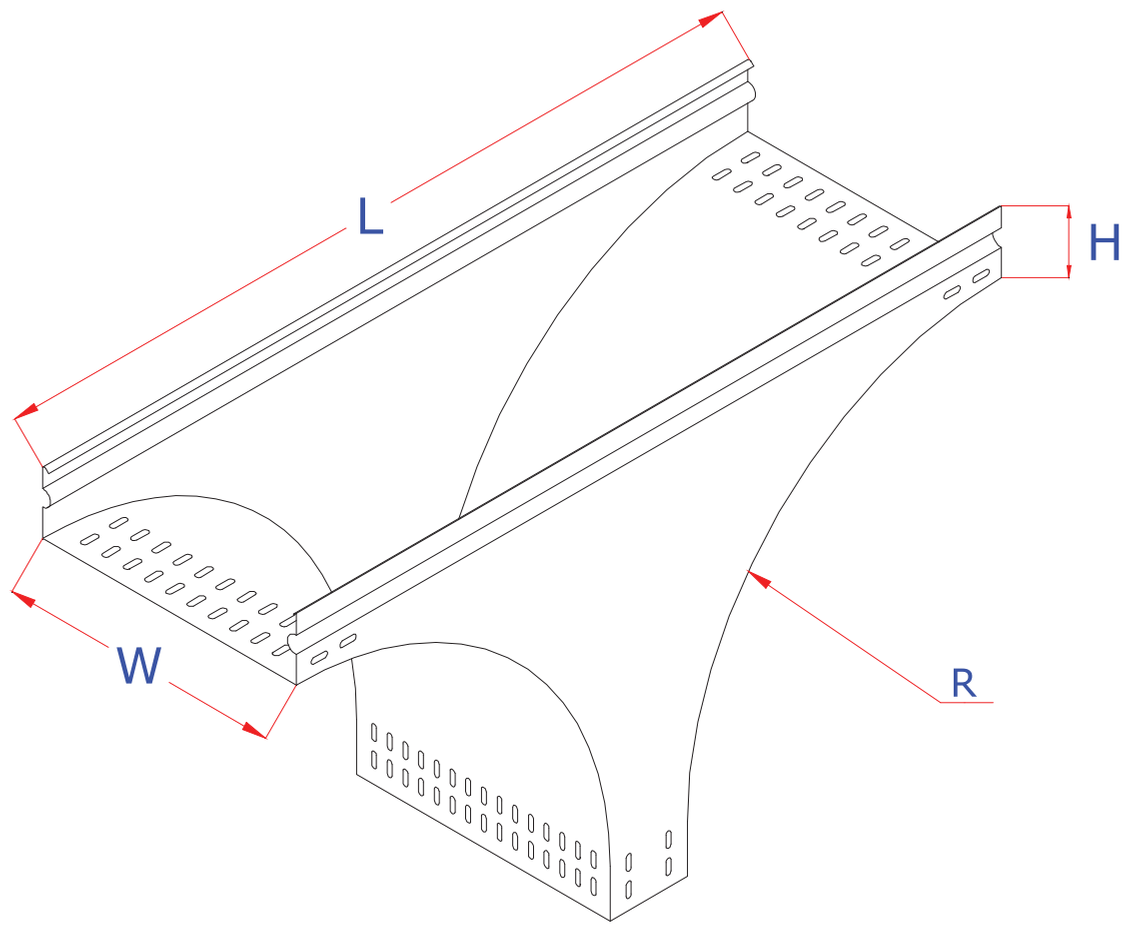
The dimension of vertical tee is attached as the dimension main cable tray

adj. ver. change of level

DESCRIPTION
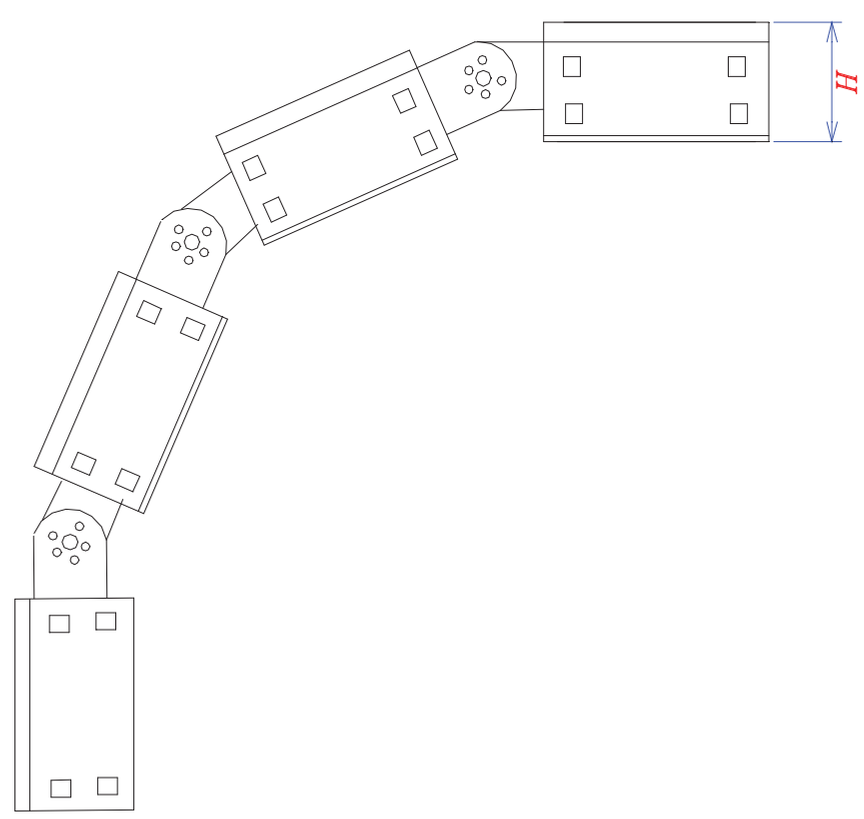
The dimension of vertical tee is attached as the dimension main cable tray

VERTICAL TEE.

DESCRIPTION
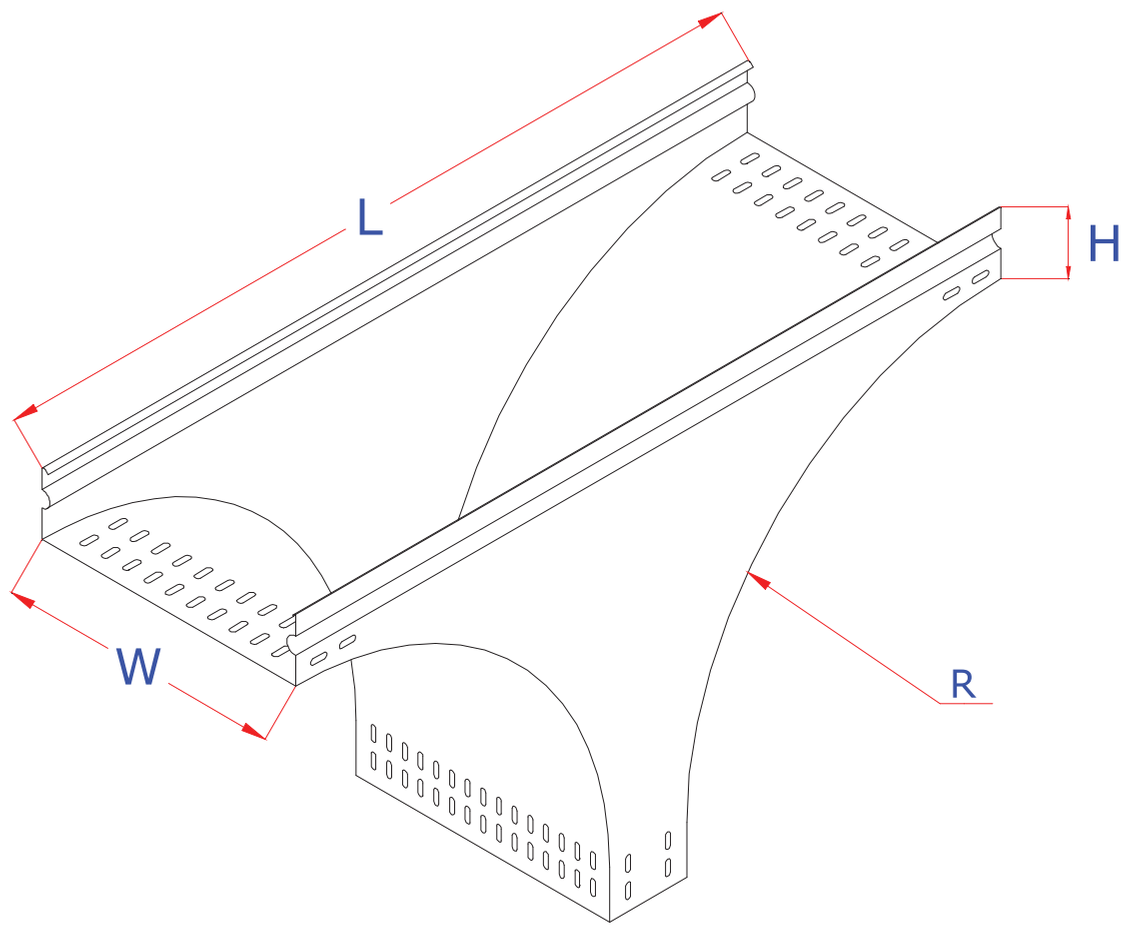
The dimension of vertical tee is attached as the dimension main cable tray

adj. ver. change of level

DESCRIPTION
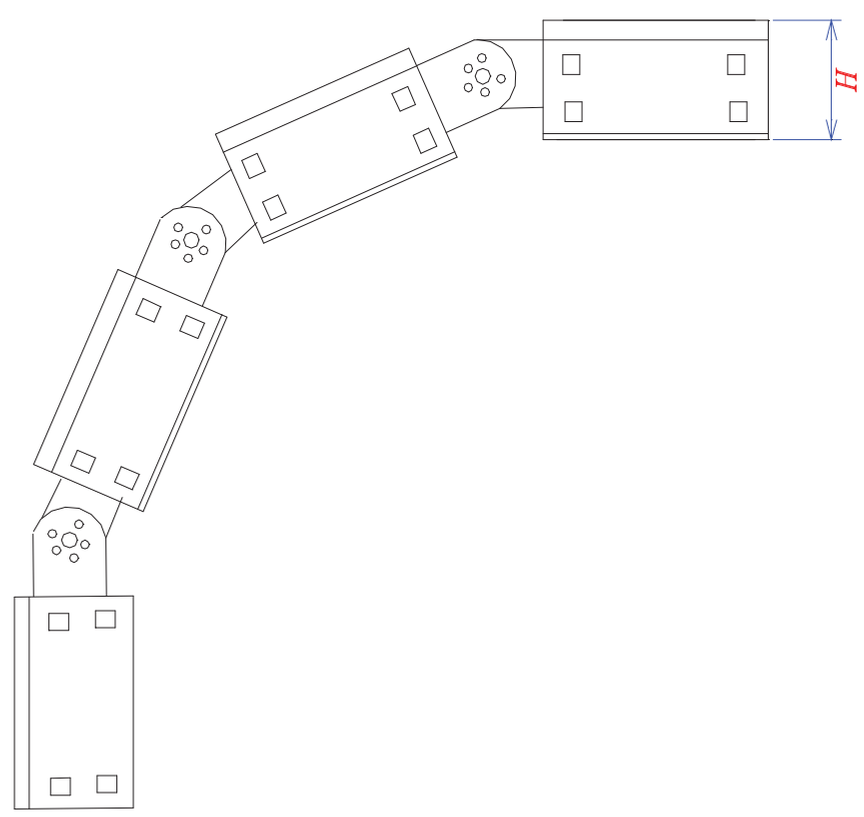
The dimension of vertical tee is attached as the dimension main cable tray

JOINT

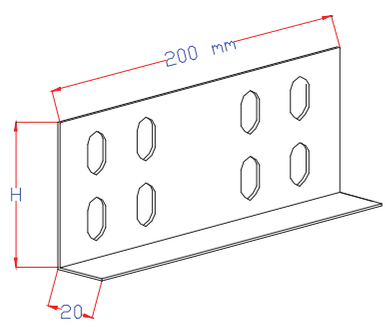

L-type

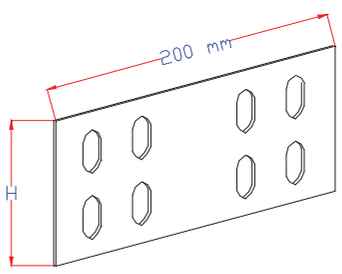

Fish type

Straight Connection.

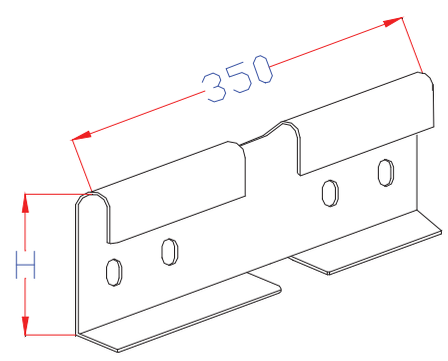

Horizontal adjustable

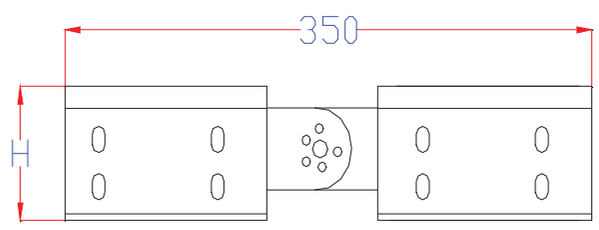

Vertical adjustable.

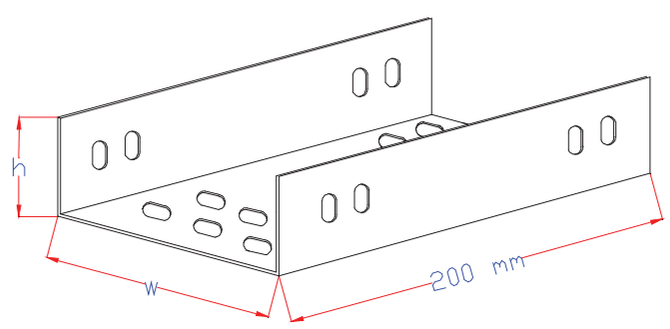

Straight connection – U type..

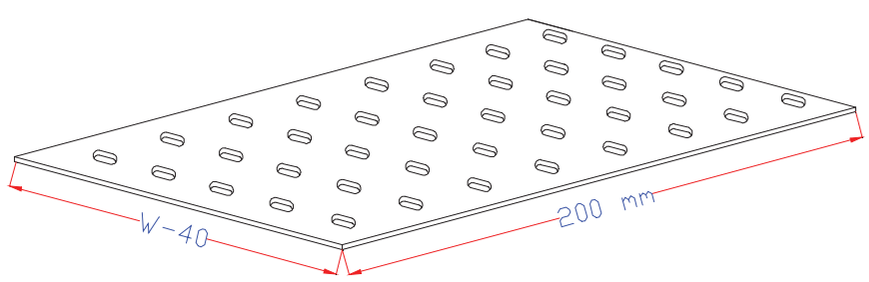

Bottom joint.

CABLE TRUNKS

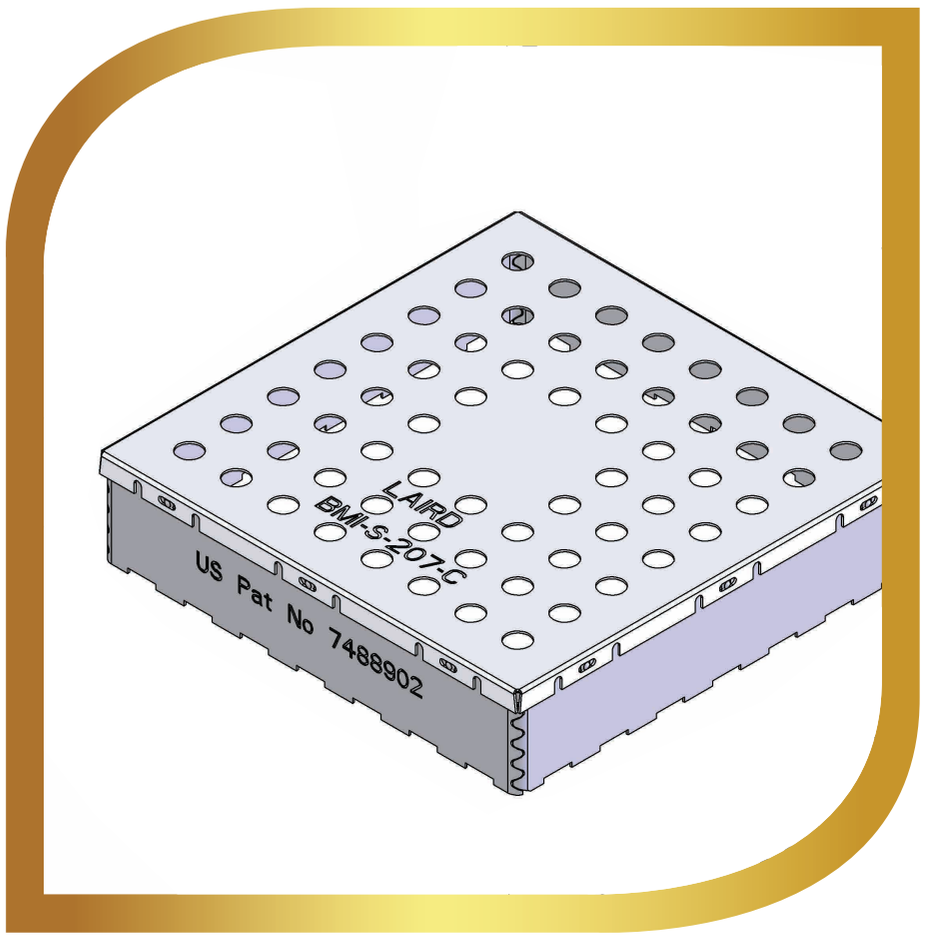

Standard Cable Trunk Udimension 12
Standard Cable Trunk Horizontal Bend 90 Connection 12
Standard Cable Trunk Horizontal Bend 45 Connection 13
Standard Cable Trunk Horizontal Reducer Connection 13
Standard Cable Trunk Horizontal Tee Connection 14
Standard Cable Trunk Horizontal X Connection 14

Cable Trunks

Standard Cable Trunks Dimensions
Standard Cable Trunk Horizontal Bend go Connection

Standard Cable Trunks Dimensions

Type	Surface Coating	Flange Type	Width W1mm	Height mm	Thickness mm	Length	Cover
CTPG	Pre-Galvanized		050				
CTHD	Hot-Dip Galvanized		100 150	25	1.0		On request
CTPP	Pre-Galvanized	N	200	50	1.25	2000	1.25
	+Electrostatic paint finally Coating	F	250	75	1.5	2500	thickness
CTHP	Hot-Dip Galvanized	R	300 350	100	2.0	3000	2000mm
	+Electrostatic paint finally Coating		400 450 500				lenght
CTSS	Stainless steel		600				

Code	Type	Flange	Width1	hight	thick
Example	CTPG	F	40	100	C

code	Thick
A	1.0
B	1.25
C	1.5
D	2.0

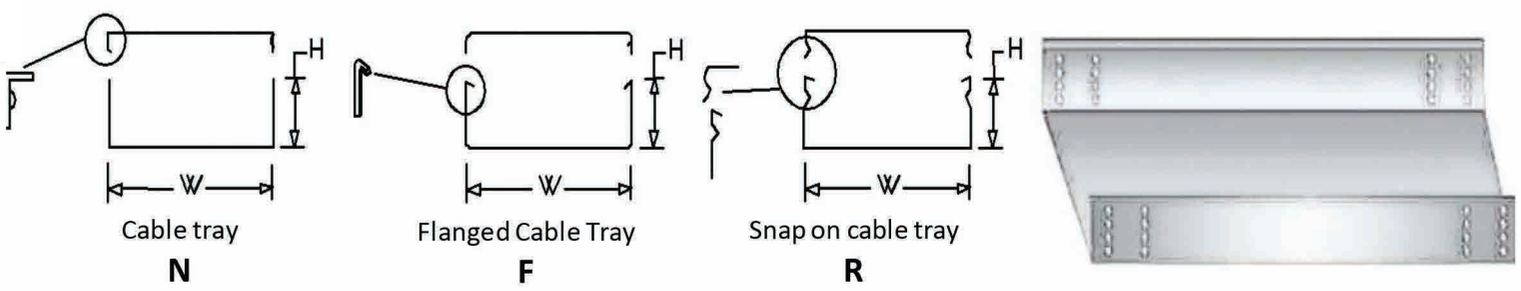

Cable tray
N

Flanged Cable Tray
F

Snap on cable tray
R

Standard Cable Trunk Horizontal Bend go Connection

Type	Surface Coating	Flange Type	Width W1mm	Width W2mm	Height mm	Thickness mm	Cover
LTPG	Pre-Galvanized		050	050			
LTHD	Hot-Dip Galvanized		100 150	100 150	25	1.0	
LTPP	Pre-Galvanized	N	200	200	50	1.25	On request
	+Electrostatic paint finally Coating	F	250	250	75	1.5	1.25mm
LTHP	Hot-Dip Galvanized	R	300 350	300 350	100	2.0	thickness
	+Electrostatic paint finally Coating		400 450 500	400 450 500			
LTSS	Stainless steel		600	600			

Code	Type	Flange	Width1	width2	hight	thick
Example	RPG	F	30	30	50	A

code	Thick
A	1.0
B	1.25
C	1.5
D	2.0

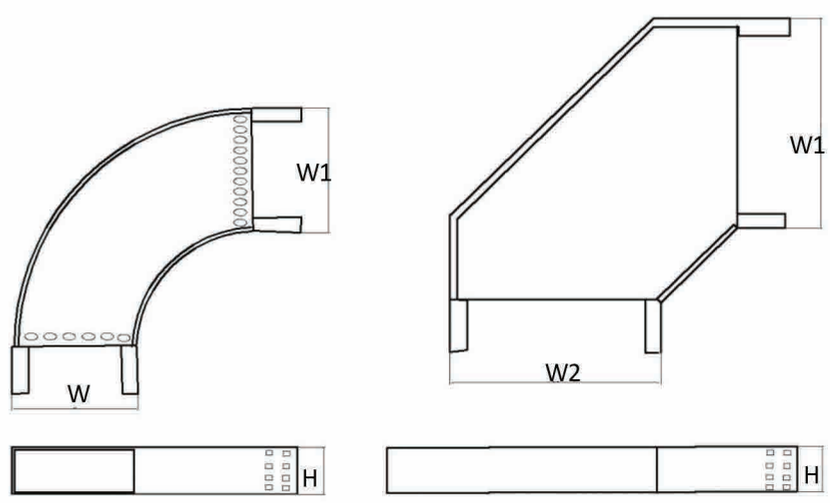

Hoy-Dip Galvanized acc to DIN 50976.
Pre-Galvanized acc to DIN EN 10142

Standard Cable Trunk Horizontal Bend 45 connectior
Standard Cable Trunk Horizontal Reducer Connection

Standard Cable Trunk Horizontal Bend 45 connection

Type	Surface Coating	Flange Type	Width W1mm	Width W2mm	Height mm	Thickness mm	Cover
VTPG	Pre-Galvanized		050	050			
VTHD	Hot-Dip Galvanized		100 150	100 150	25	1.0	
VTPP	Pre-Galvanized	N	200	200	50	1.25	On request
	+Electrostatic paint finally Coating	F	250	250	75	1.5	1.25
VTHP	Hot-Dip Galvanized	R	300 350	300 350	100	2.0	thickness
	+Electrostatic paint finally Coating		400 450 500	400 450 500			
VTSS	Stainless steel		600	600			

Code	Type	Flange	Width1	width2	hight	thick
Example	VTPG	F	40	30	100	C

code	Thick
A	1.0
B	1.25
C	1.5
D	2.0

For curved type add C after code **

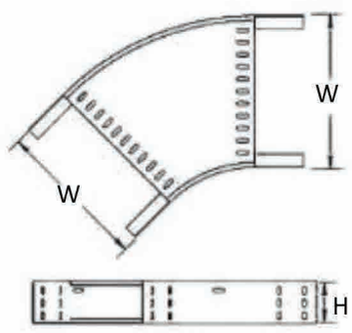

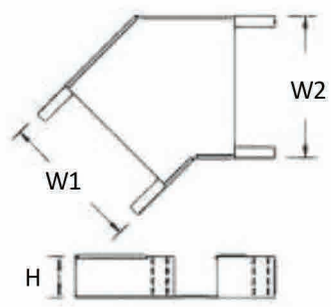

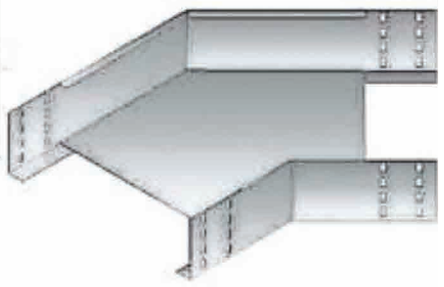

Standard Cable Trunk Horizontal Reducer Connection

Type	Surface Coating	Flange Type	Width W1mm	Width W2mm	Height mm	Thickness mm	Reducer Dir.	Cover
RTPG	Pre-Galvanized		050	050				
RTHD	Hot-Dip Galvanized		100 150	100 150	25	1.0		
RTPP	Pre-Galvanized	N	200	200	50	1.25	L	On request
	+Electrostatic paint finally Coating	F	250	250	75	1.5	R	1.25mm
RTHP	Hot-Dip Galvanized	R	300 350	300 350	100	2.0	M	thickness
	+Electrostatic paint finally Coating		400 450 500	400 450 500				
RTSS	Stainless steel		600	600				

Code	Type	Flange	Width1	width2	hight	Dir	thick
Example	RTPG	F	30	30	50	L	A

code	Thick
A	1.0
B	1.25
C	1.5
D	2.0

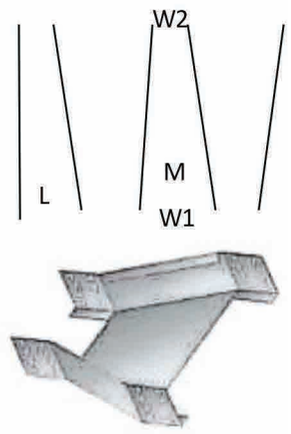

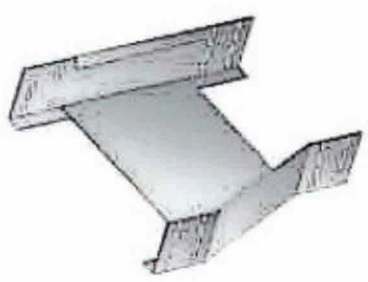

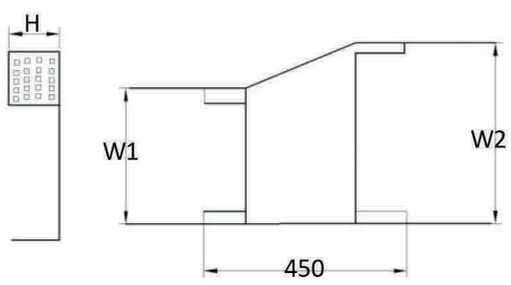

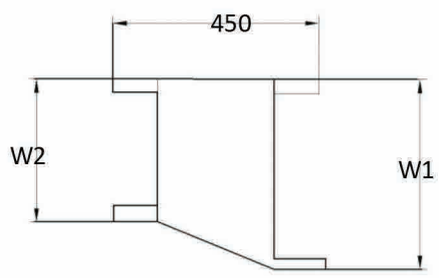

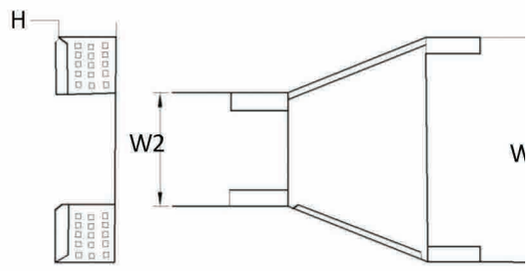

Cable Trunks

Standard Cable Trunk Horizontal Bend 45 connection
Standard Cable Trunk Horizontal Reducer Connection

Standard Cable Trunk Horizontal Bend 45 connection

Type	Surface Coating	Flange Type	Width W1mm	Width W2mm	Width W3mm	Height mm	Thickness mm	Cover
TPG	Pre-Galvanized		050	050	050			
THD	Hot-Dip Galvanized		100 150	100 150	100 150	25	1.0	
TPP	Pre-Galvanized	N	200	200	200	50	1.25	On request
	+Electrostatic paint finally Coating	F	250	250	250	75	1.5	1.25
THP	Hot-Dip Galvanized	R	300 350	300 350	300 350	100	2.0	thickness
	+Electrostatic paint finally Coating		400 450 500	400 450 500	400 450 500			
Tss	Stainless steel		600	600	600			

Code	Type	Flange	Width1	width2	Width3	hight	thick
Example	TPG	F	40	30	30	75	C

code	Thick
A	1.0
B	1.25
C	1.5
D	2.0

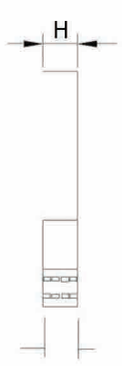

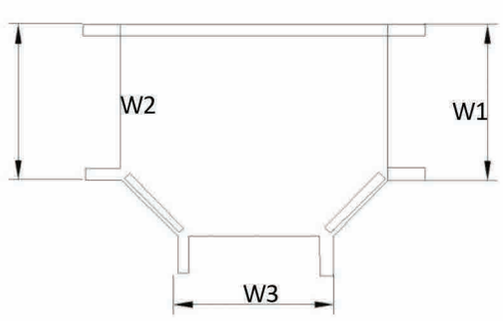

Standard Cable Trunk Horizontal Reducer Connection

Type	Surface Coating	Flange Type	Width W1mm	Width W2mm	Width W3mm	Width W4mm	Thickness mm.	Cover
XTPG	Pre-Galvanized		050	050	050	050		
XTHD	Hot-Dip Galvanized		100 150	100 150	100 150	100 150		
XTPP	Pre-Galvanized	N	200	200	200	200	L	On request
	+Electrostatic paint finally Coating	F	250	250	250	250	R	1.25mm
XTHP	Hot-Dip Galvanized	R	300 350	300 350	300 350	300 350	M	thickness
	+Electrostatic paint finally Coating		400 450 500	400 450 500	400 450 500	400 450 500		
XTSS	Stainless steel		600	600	600	600		

Code	Type	Flange	Width1	Width2	Width3	Width4	Hight	thick
Example	RPG	F	20	05	20	05	50	A

code	Thick
A	1.0
B	1.25
C	1.5
D	2.0

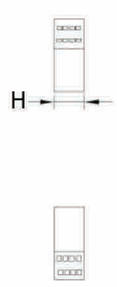

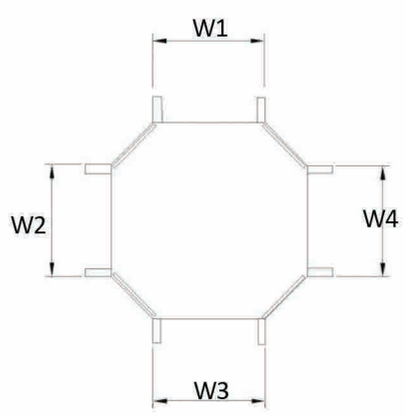

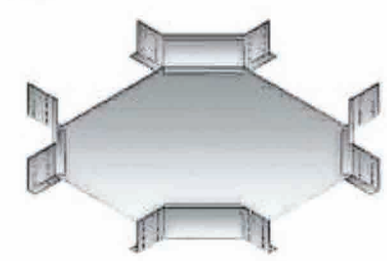

Hoy-Dip Galvanized acc to DIN 50976.
Pre-Galvanized acc to DIN EN 10142

CABLE TRUNKS

- Material. (steel , stainless steel and aluminum)
- Finish.

7. Hot- dip galvanized after fabrication according to DIN 50976 –zinc coating thickness on one side 50-60 µm (350-420 gm^2).
8. Pre galvanized according to DIN 17162 on both sides 275 gm/m^2.
3. P. v. c coated. 4. Epoxy

- 2000 & 3000 mm Standard Length.
- All Dimensions in (mm).

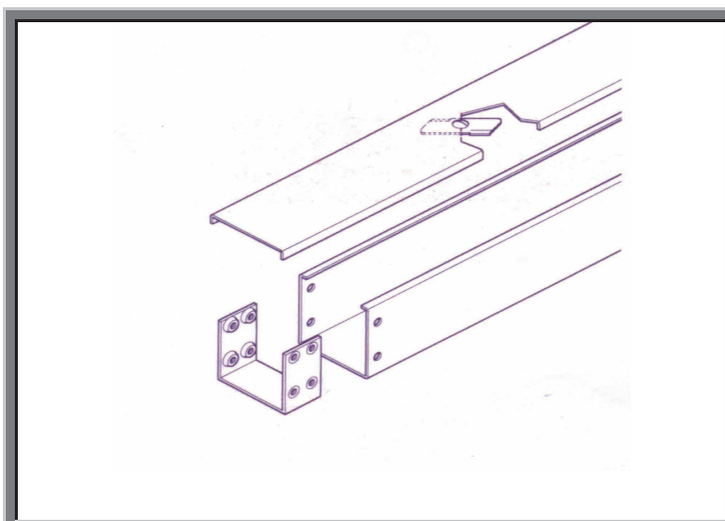	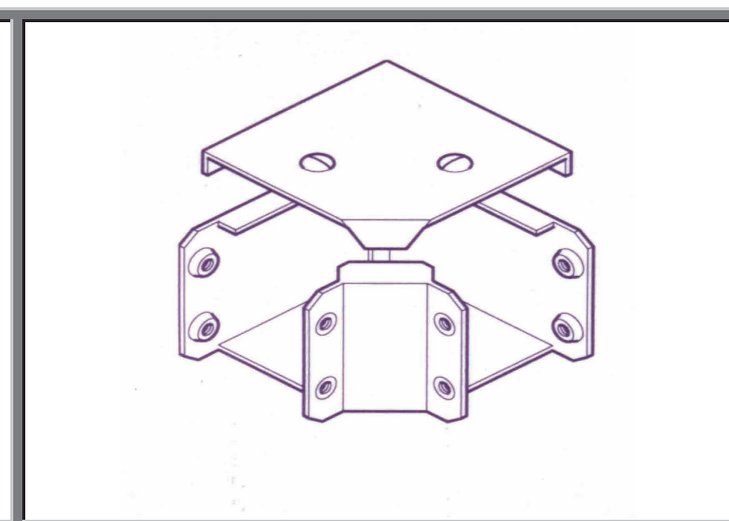	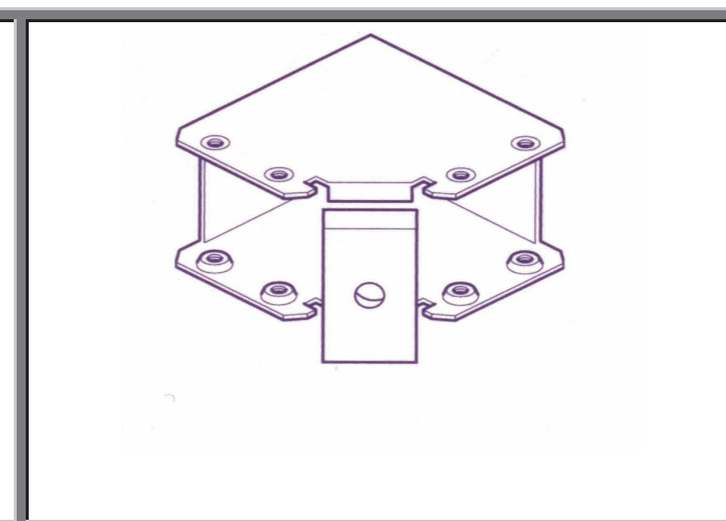
STRAIGHT ONE WAY	TOP COVER	INSIDE COVER
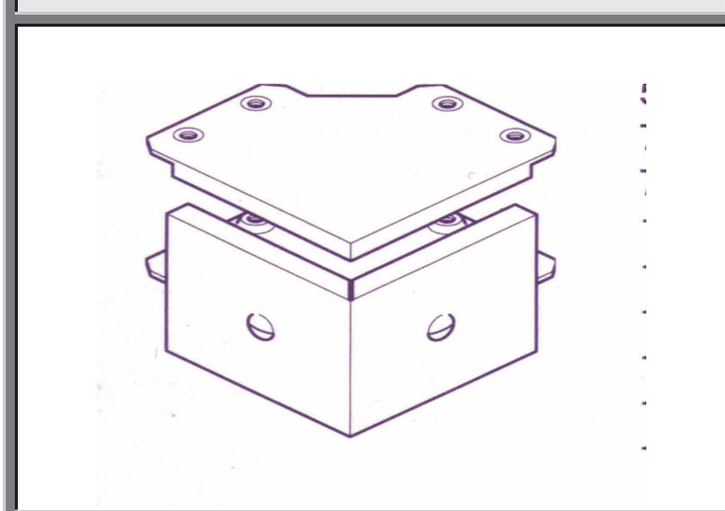	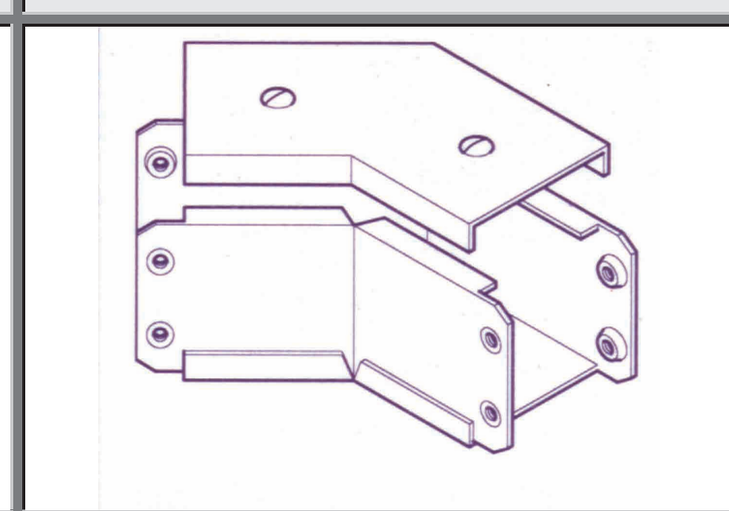	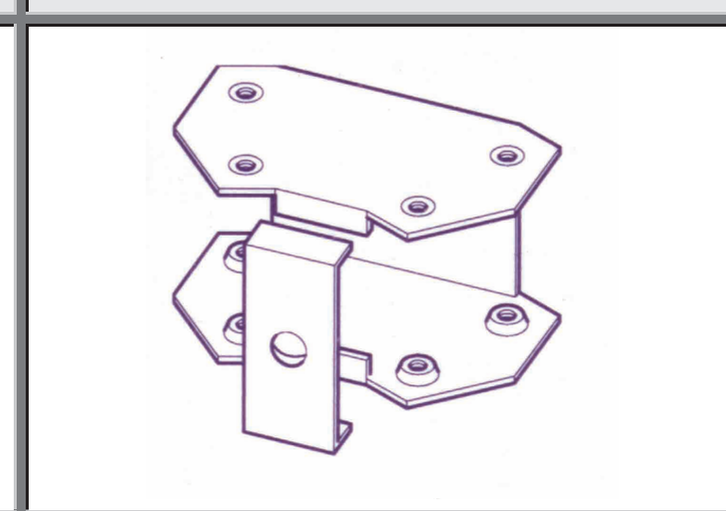
INSIDE COVER 45″	TOP COVER 45″	INSIDE COVER 45″
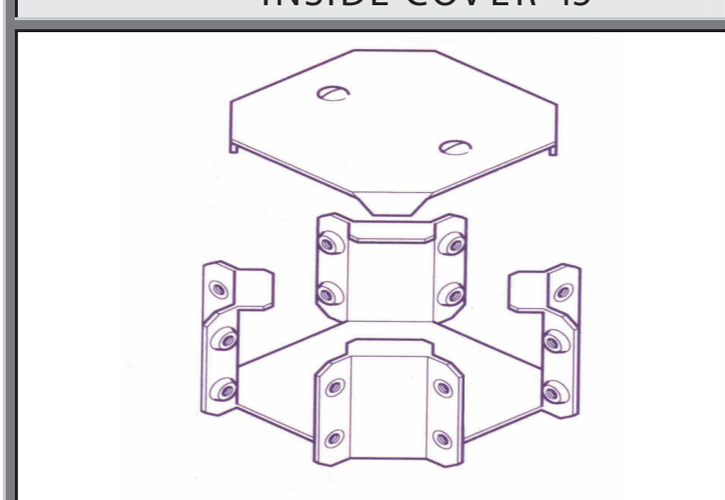	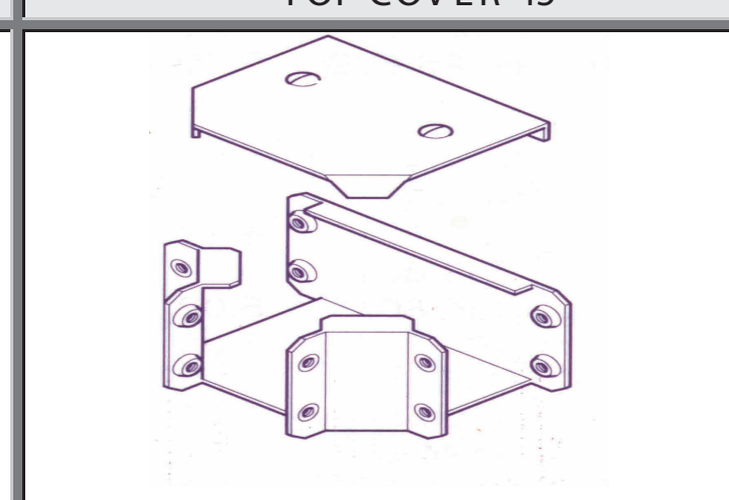	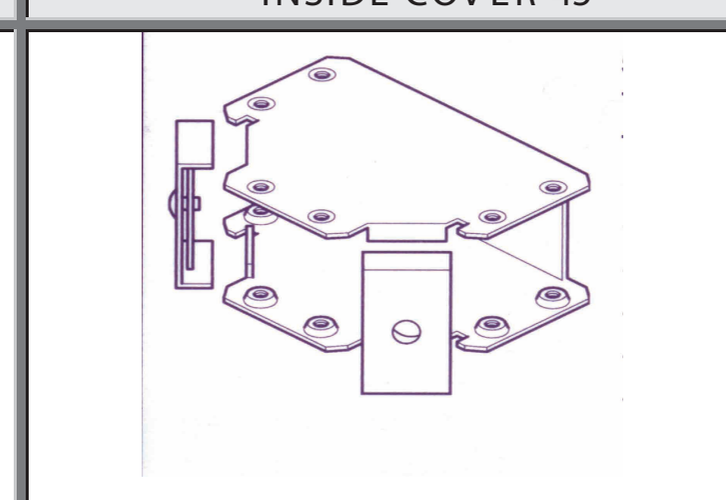
TOP COVER CROSS	TOP COVER TEE	INSIDE COVER TEE
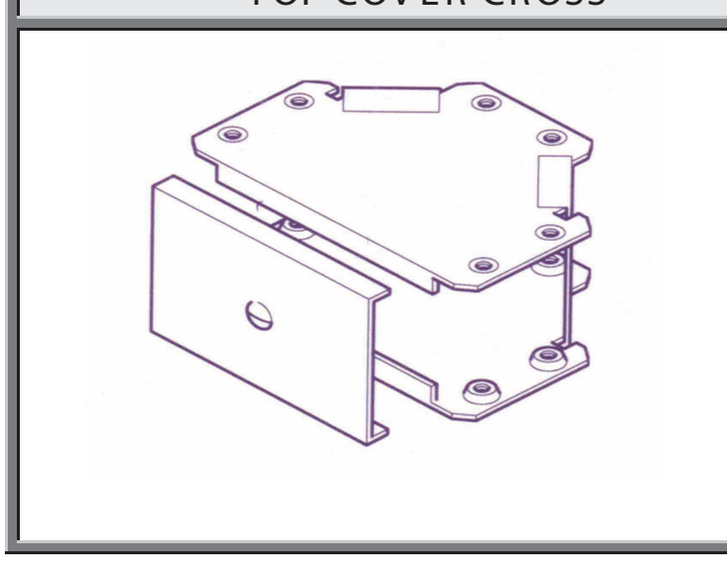	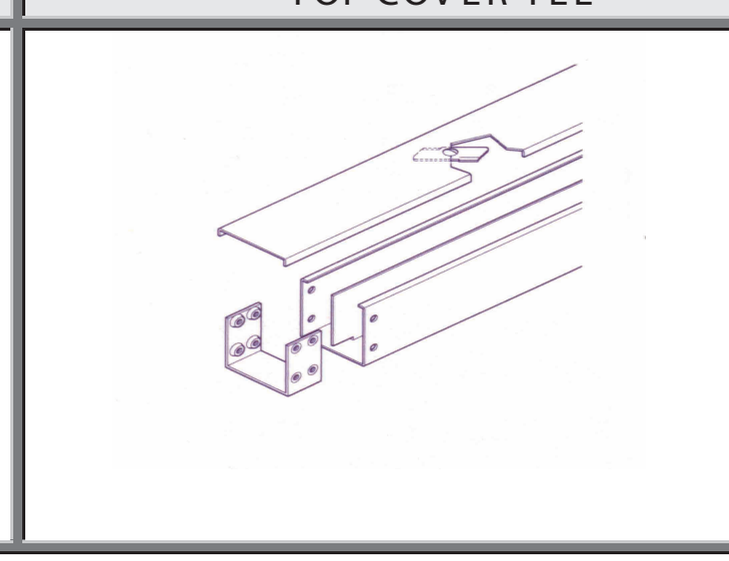	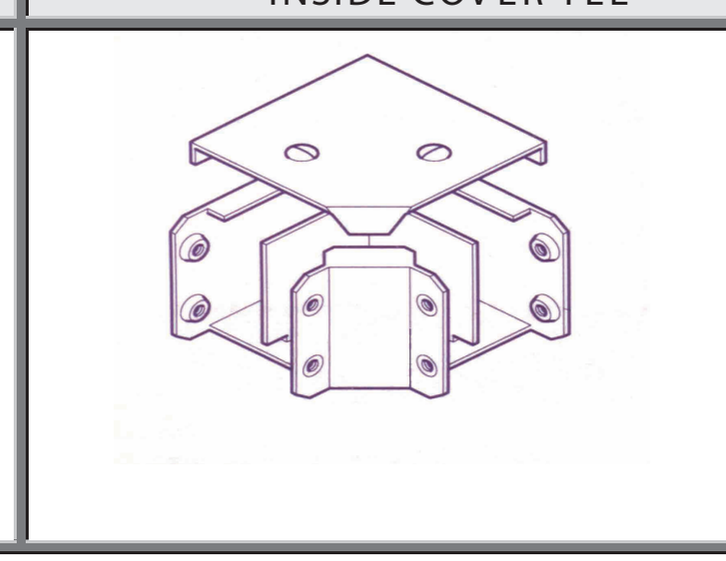

CABLE TRUNKS

INSIDE COVER TEE	STRAIGHT TWO WAY	TOP COVER
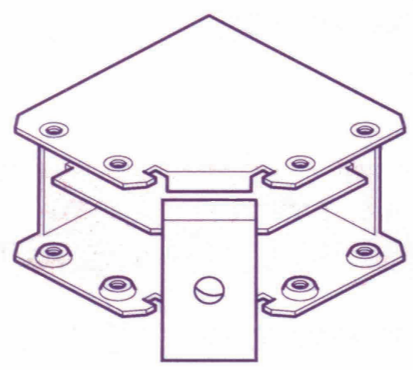	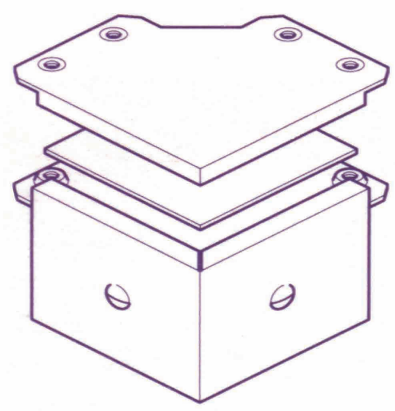	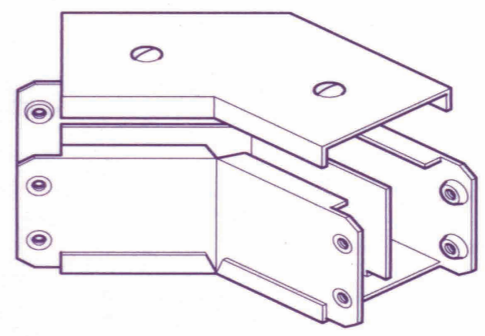
INSIDE COVER	**OUTSIDE COVER**	**TOP COVER 45”**
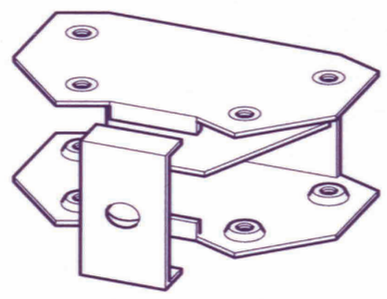	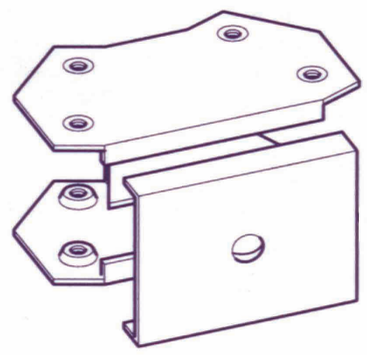	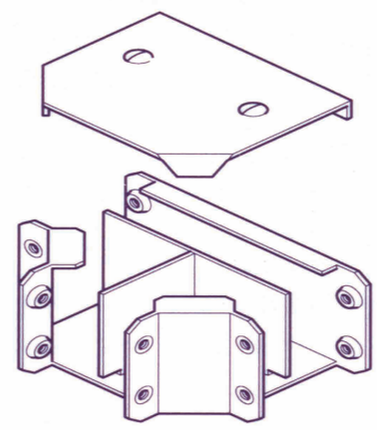
INSIDE COVER	**OUT SIDE COVER 45’**	**TOP COVER TEE**
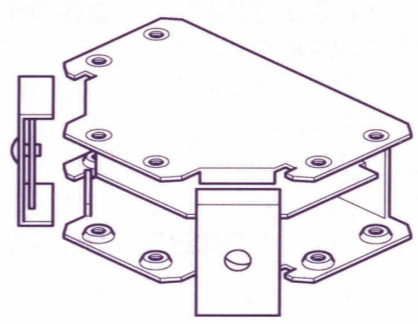	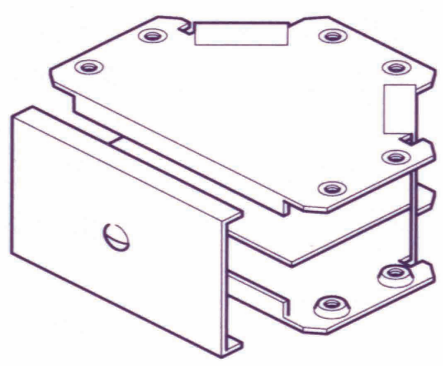	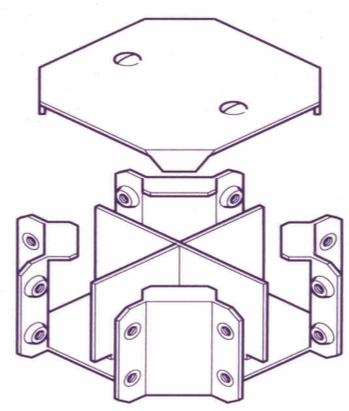
INSIDE COVER TEE	**OUT SIDE TEE**	**TOP COVER CROSS**

CABLE LADDER

Standard Cable Ladder Udimension 16
Standard Cable Ladder Horizontal Bend 90 Connection 16
Standard Cable Ladder Horizontal Bend 45 Connection 17
Standard Cable Ladder Horizontal Reducer Connection 17
Standard Cable Ladder Horizontal Tee Connection 18
Standard Cable Ladder Horizontal X Connection 18
Standard Cable Ladder Vertical Bend 90 Connection 19

Cable Ladders

Standard Cable Ladder Dimensions
Standard Cable Ladder Horizontal Bend go Connection

Standard Cable Ladder Dimensions

Type	Surface Coating	Side rail type	Width W1mm	Height mm	Thickness mm	Length Lmm	Cover
CLPG	Pre-Galvanized						
CLHD	Hot-Dip Galvanized		100 150				On request
CLPP	Pre-Galvanized	S	200	60	Side rail=2.0	2000	1.25mm
	+Electrostatic paint finally Coating	C	250 300	110	Rungs=1.5	2500	Thickness
CLHP	Hot-Dip Galvanized		350	160		3000	2000mm
	+Electrostatic paint finally Coating		400 450 500				length
CLSS	Stainless steel		600				

Code	Type	Side rail	Width1	hight
Example	CIPG	S	40	160

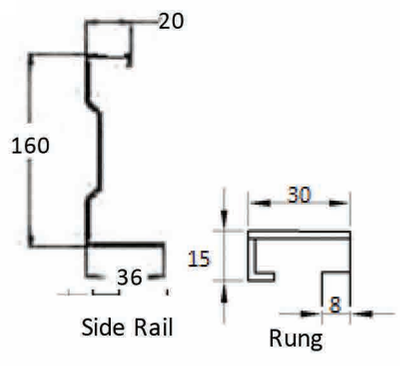

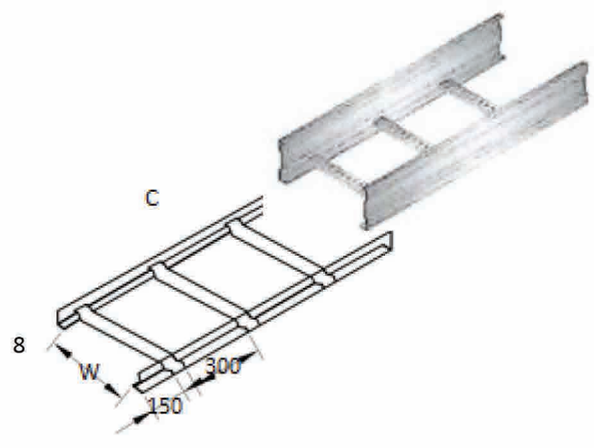

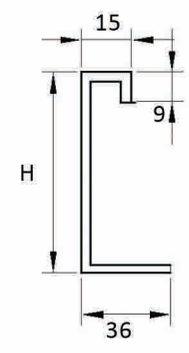

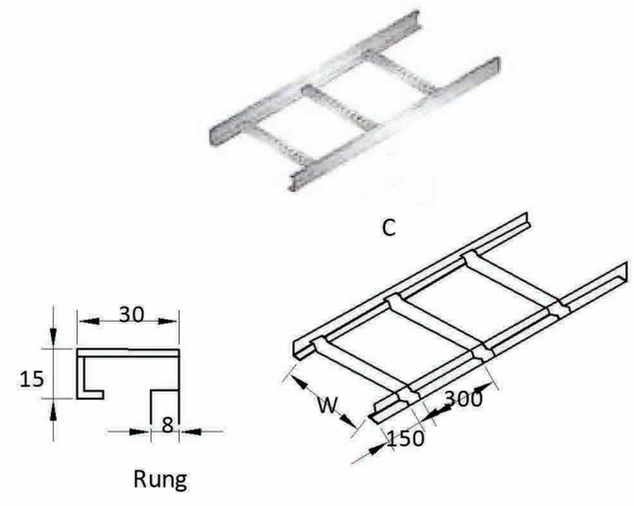

Standard Cable Ladder Horizontal bend go Connection

Type	Surface Coating	Side rail Type	Width W1mm	Width W2mm	Height mm	Thickness mm	Cover
LLPG	Pre-Galvanized						
LLHD	Hot-Dip Galvanized		100 150	100 150			
LLPP	Pre-Galvanized	S	200	200	60	Side rail =2.0	On request
	+Electrostatic paint finally Coating	C	250 300	250 300	110	Rungs=1.5	1.25mm
LLHP	Hot-Dip Galvanized		350	350	160		thickness
	+Electrostatic paint finally Coating		400 450 500	400 450 500			
LLSS	Stainless steel		600	600			

Code	Type	Side rail type	Width1	width2	hight
Example	LLPG	S	40	30	60

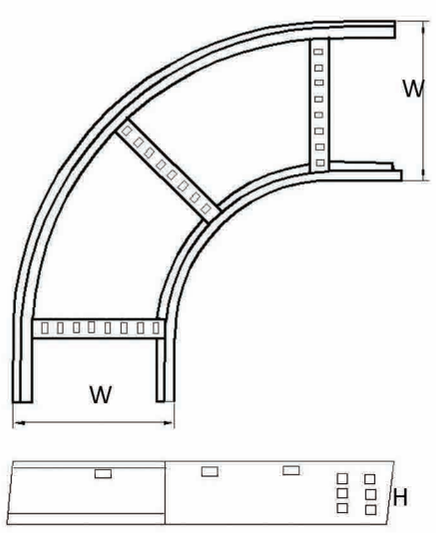

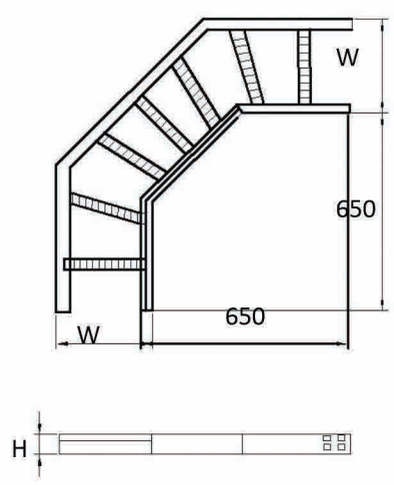

Hoy-Dip Galvanized acc to DIN 50976.
Pre-Galvanized acc to DIN EN 10142

Standard Cable Ladder Bend 45 Connection

Type	Surface Coating	Side rail Type	Width W1mm	Width W2mm	Height mm	Thickness mm	Cover
VLPG	Pre-Galvanized		100	100			
VLHD	Hot-Dip Galvanized		150	150			
VLPP	Pre-Galvanized	S	200	200	60	Side rail =2.0	On request
	+Electrostatic paint finally Coating	C	250	250	110	Rungs=1.5	1.25mm
VLHP	Hot-Dip Galvanized		300	300	160		thickness
	+Electrostatic paint finally Coating		350	350			
			400	400			
			450	450			
			500	500			
VLSS	Stainless steel		600	600			

Code	Type	Side rail type	Width1	width2	hight
Example	RTPG	C	60	50	100

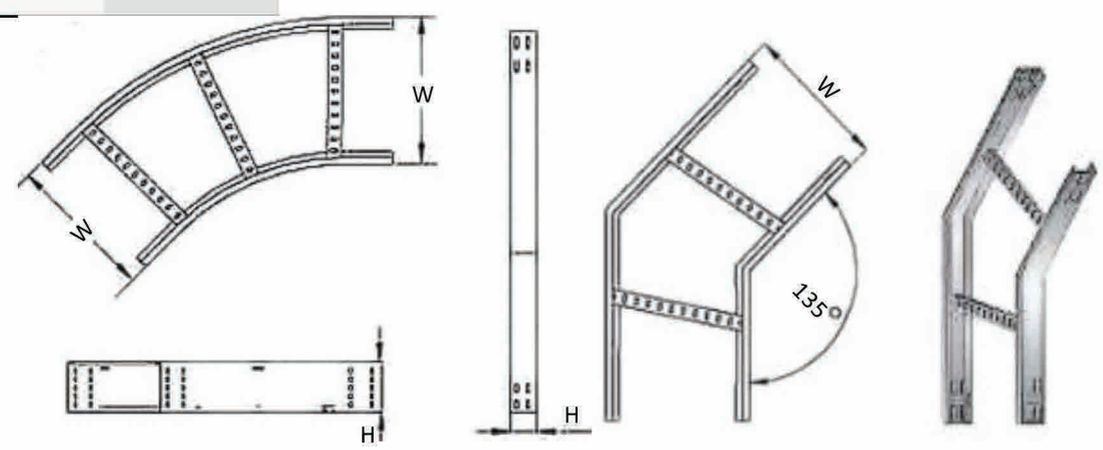

Standard Cable Ladder Horizontal Reducer Connection

Type	Surface Coating	Side rail Type	Width W1mm	Width W2mm	Height mm	Thickness mm	Reducer Dir.	Cover
RLPG	Pre-Galvanized		100	100				
RLHD	Hot-Dip Galvanized		150	150				
RLPP	Pre-Galvanized	S	200	200	60	Side rail =2.0	L	On request
	+Electrostatic paint finally Coating	C	250	250	110	Rungs=1.5	R	1.25mm
RLHP	Hot-Dip Galvanized		300	300	160		M	thickness
	+Electrostatic paint finally Coating		350	350				
			400	400				
			450	450				
			500	500				
RLSS	Stainless steel		600	600				

Code	Type	Side rail type	Width1	width2	hight	Dir
Example	RTPG	F	30	30	50	L

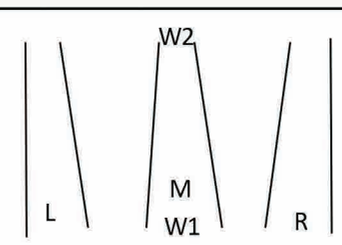

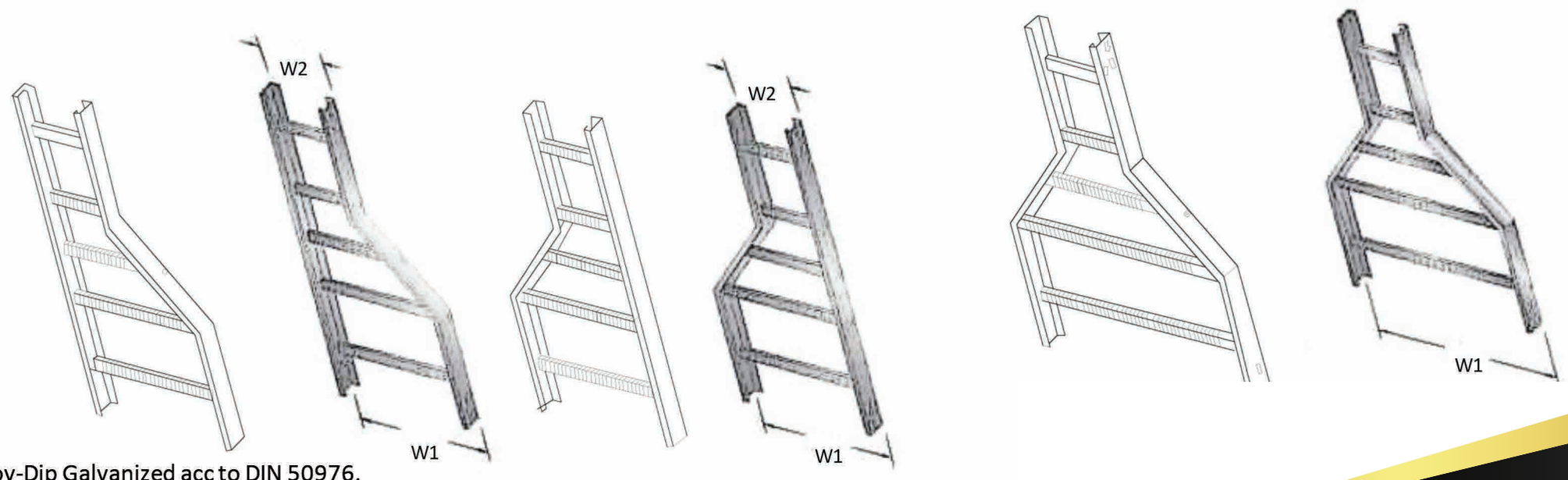

Hoy-Dip Galvanized acc to DIN 50976.
Pre-Galvanized acc to DIN EN 10142

Standard Cable Ladder Horizontal Tee Connection

Type	Surface Coating	Side rail Type	Width W1mm	Width W2mm	Width W3mm	Height mm	Thickness mm	Cover
TLPG	Pre-Galvanized		100	100	100			
TLHD	Hot-Dip Galvanized		150	150	150			
TLPP	Pre-Galvanized	S	200	200	200	60	Sdie rail =2.0	On request
	+Electrostatic paint finally Coating	C	250	250	250	110	Rungs=1.5	1.25
TLHP	Hot-Dip Galvanized		300	300	300	160		thickness
	+Electrostatic paint finally Coating		350	350	350			
			400	400	400			
			450	450	450			
			500	500	500			
TLSS	Stainless steel		600	600	600			

Code	Type	Side rail	Width1	width2	Width3	hight
Example	TLPG	S	40	30	30	60

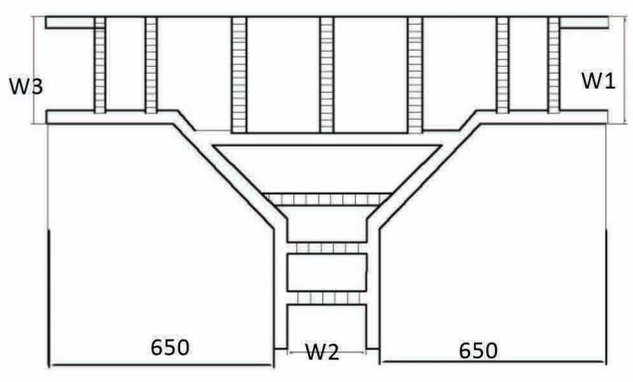

Standard Cable Ladder Horizontal X Connection

Type	Surface Coating	Side rail type	Width W1mm	Width W2mm	Width W3mm	Width W4mm	Hight Hmm	Thickness mm.	Cover
XLPG	Pre-Galvanized		100	100	100	100			
XLHD	Hot-Dip Galvanized		150	150	150	150			
XLPP	Pre-Galvanized	S	200	200	200	200	60	Sdie rail =2.0	On request
	+Electrostatic paint finally Coating	c	250	250	250	250	110	Rungs=1.5	1.25mm
XLHP	Hot-Dip Galvanized		300	300	300	300	160		thickness
	+Electrostatic paint finally Coating		350	350	350	350			
			400	400	400	400			
			450	450	450	450			
			500	500	500	500			
XLSS	Stainless steel		600	600	600	600			

Code	Type	Side rail	Width1	Width2	Width3	Width4	Hight
Example	TLPG	S	20	05	3.	05	110

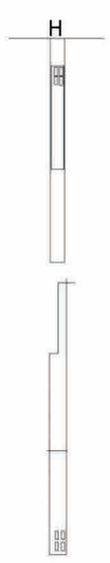

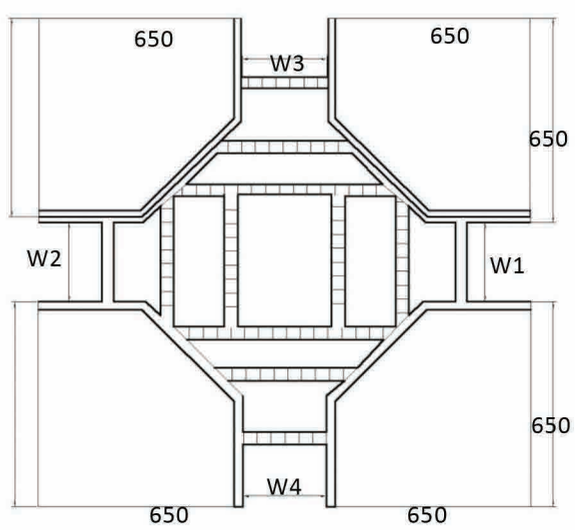

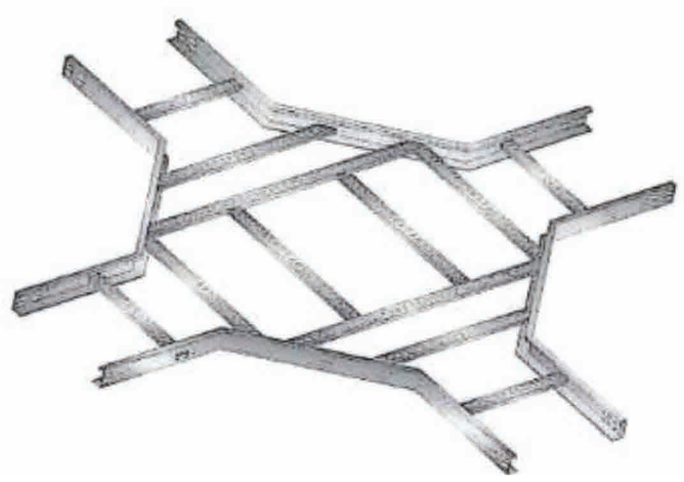

Hoy-Dip Galvanized acc to DIN 50976.
Pre-Galvanized acc to DIN EN 10142

CABLE LADDER

Standard cable Ladder Vertical Bend go Connection

Standard cable Ladder Vertical Bend go Connection

Type	Surface Coating	Side rail type	Width W1mm	Height mm	Thickness mm	Cover
VLPG	Pre-Galvanized		100			
VLHD	Hot-Dip Galvanized		150			On request
VLPP	Pre-Galvanized	S	200	60	Side rail=2.0	1.25mm
	+Electrostatic paint finally Coating	C	250	110	Rungs=1.5	Thickness
VLHP	Hot-Dip Galvanized		300	160		
			350			
	+Electrostatic paint finally Coating		400			
			450			
			500			
VLSS	Stainless steel		600			

Code	Type	Side rail	Width1	hight
Example	VLPG	S	40	60

Add F/R at end
For falling/Rising

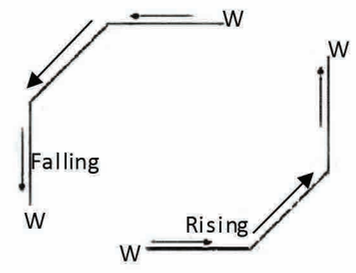

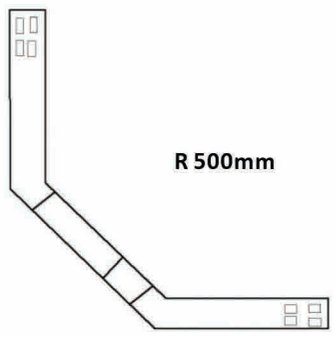

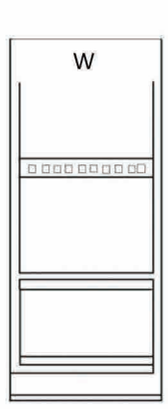

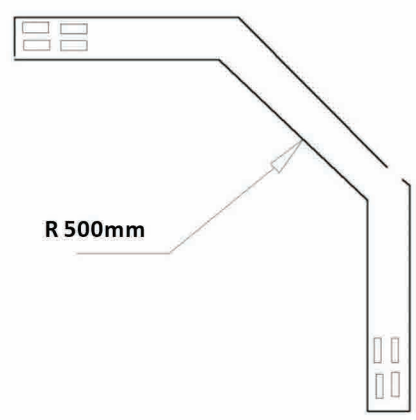

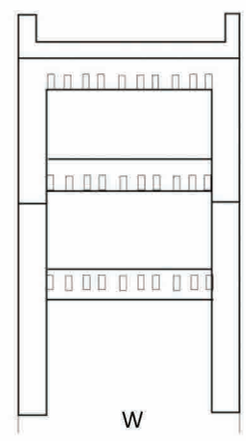

CABLE LADDER

Straight Element.

- Material. (steel , stainless steel and aluminum)
- Finish.

3. Hot- dip galvanized after fabrication according to DIN 50976 –zinc coating thickness on one side 50-60 µm (350-420 gm²).
4. Pre galvanized according to DIN 17162 on both sides 275 gm/m².

3. P. v. c coated. 4. Epoxy

- 60 & 90 & 110 & 125 & 150 & 175 mm Standard height of side.
- 2000 & 3000 & 6000 mm Standard Length.
- All Dimensions in (mm).

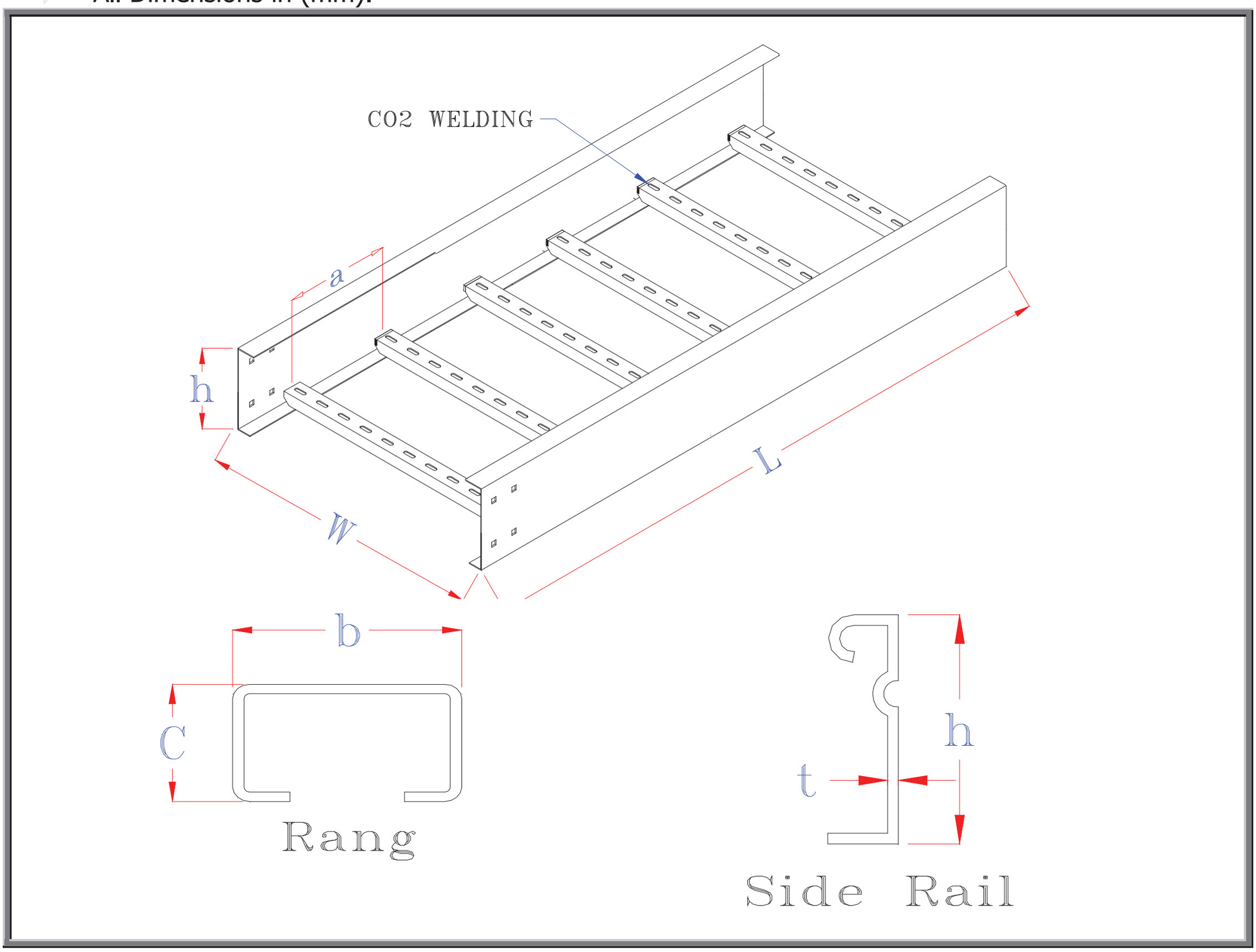

WIDTH (W)	100 & 200 & 300 & 400 & 500 & 600 & 700 & 800 mm.
RANG SPACE (a)	225 & 250 & 300 mm.
RANG (b x c)	(40 X 20) & (50 X 25) mm.

Cable Ladder fittings

TEE.

TYPE	Width (b)	OVERALL DIM. X x Y	description
TL1	100	1360 x 730	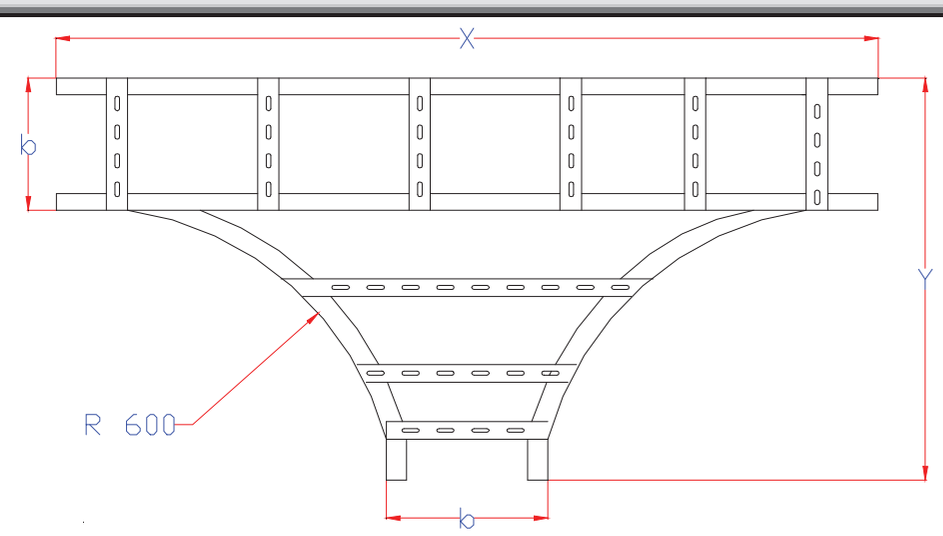
TL2	200	1460 x 830	
TL3	300	1560 x 930	
TL4	400	1660 x 1030	
TL5	500	1760 x 1130	
TL6	600	1860 x 1230	
TL7	700	1960 x 1330	
TL8	800	2060 x 1430	

CROSS.

TYPE	Width (b)	OVERALL DIM. X x Y	description
CL1	100	1360 x 1360	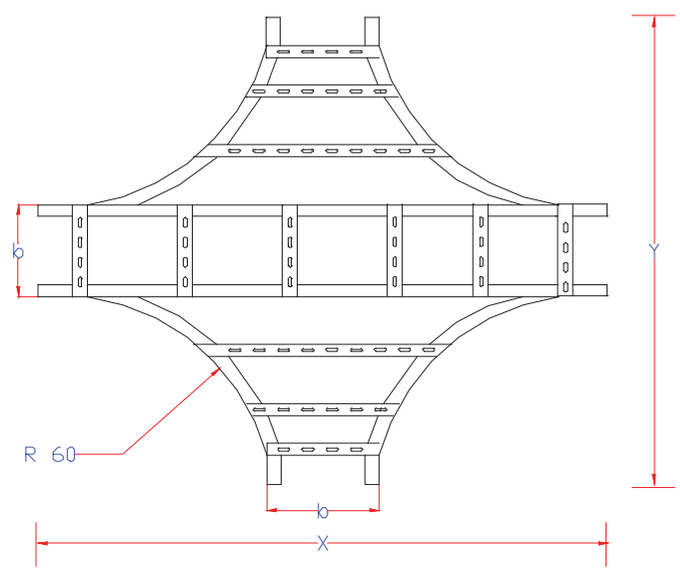
CL2	200	1460 x 1460	
CL3	300	1560 x 1560	
CL4	400	1660 x 1660	
CL5	500	1760 x 1760	
CL6	600	1860 x 1860	
CL7	700	1960 x 1960	
CL8	800	2060 x 2060	

Off-set reducers

TYPE	Width mm.	OVERALL DIM. X x Y	description
RL1	200/100	200 x 500	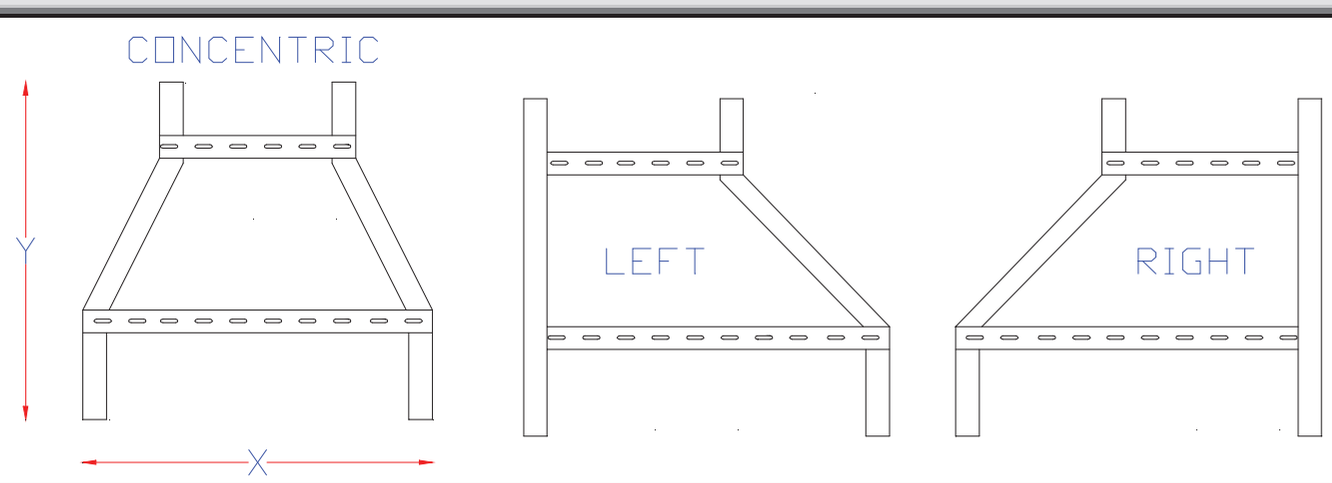
RL2	300/...	300 x 500	
RL3	400/...	400 x 500	
RL4	500/...	500 x 500	
RL5	600/...	600 x 500	
RL6	700/...	700 x 500	
RL7	800/...	800 x 500	

Horizontal ELBOW 90 ^{0}

TYPE	Width (b)	OVERALL DIM. X x Y	description
HEL1	100	733 x 733	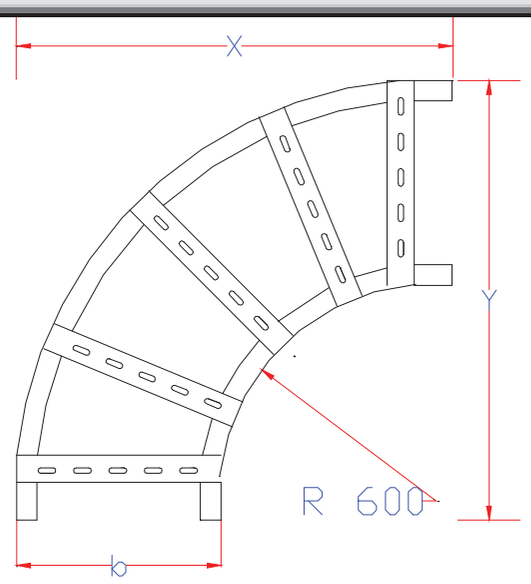
HEL2	200	833 x 833	
HEL3	300	933 x 933	
HEL4	400	1033 x 1033	
HEL5	500	1133 X 1133	
HEL6	600	1233 x 1233	
HEL7	700	1333 x 1333	
HEL8	800	1961 x 1961	

horizontal ELBOW 45 ^{0}

TYPE	Width (b)	OVERALL DIM. X x Y	description
HEL9	100	297 x 547	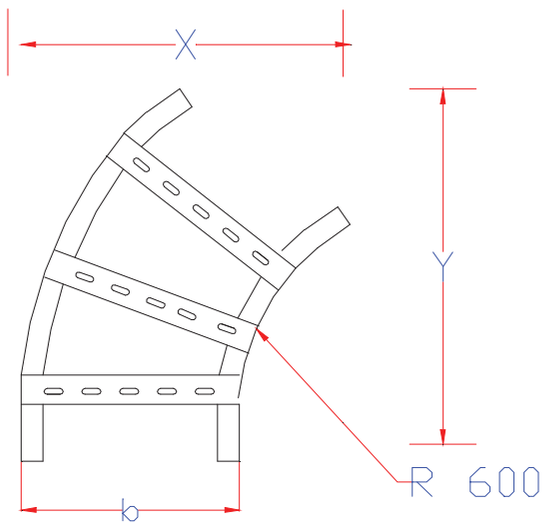
HEL10	200	397 x 618	
HEL11	300	497 x 688	
HEL12	400	597 x 760	
HEL13	500	697 X 830	
HEL14	600	797 x 900	
HEL15	700	897 x 971	
HEL16	800	997 x 1042	

INSIDE ELBOW 90 ^{0}

TYPE	HEIGHT (h)	OVERALL DIM. X x Y	description
VEL1	60	644 x 644	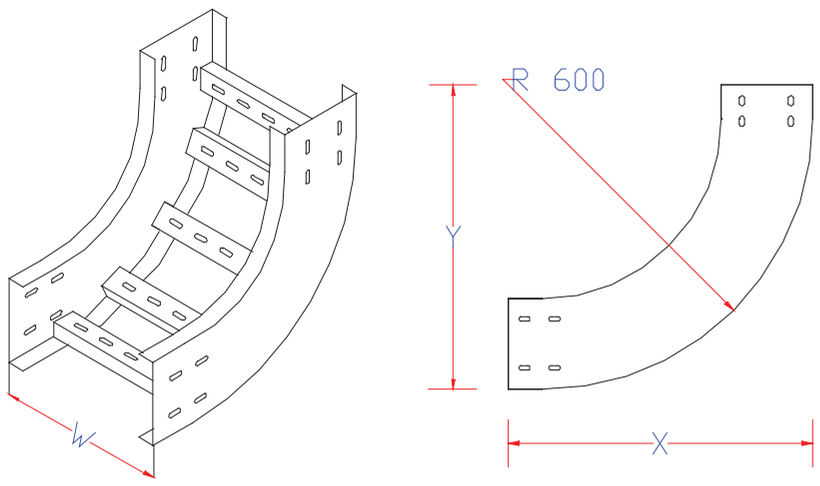
VEL2	90	644 x 644	
VEL3	125	644 x 644	
VEL4	150	644 x 644	
VEL5	175	644 x 644	

CABLE LADDER

INSIDE ELBOW 45 ^{0}

TYPE	HEIGHT(h)	OVERALL DIM.X x Y	description
VEL6	60	495 x 475.5	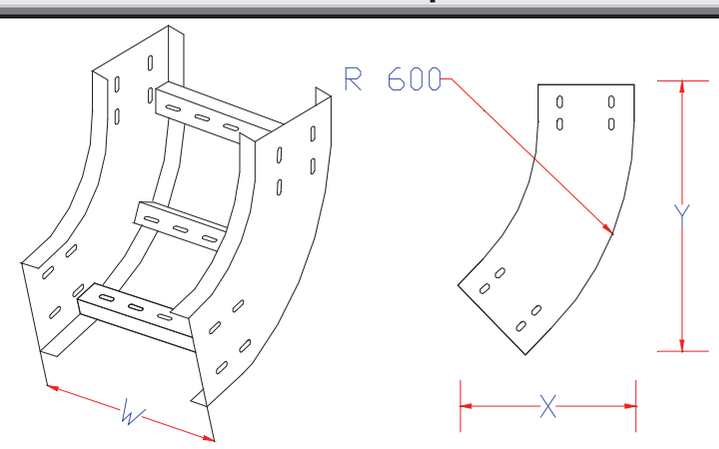
VEL7	90	260.6 x 475.5	
VEL8	125	385.4 x 475.5	
VEL9	150	303 x 475.5	
VEL10	175	320.8 x 475.5	

OUTSIDE ELBOW 90 ^{0}

TYPE	HEIGHT(h)	OVERALL DIM.X x Y	description
VEL11	60	730 x 730	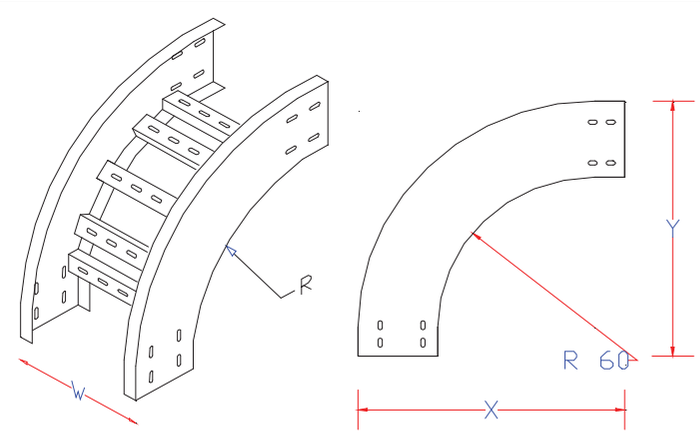
VEL12	90	760 x 760	
VEL13	125	795 x 795	
VEL14	150	820 x 820	
VEL15	175	845 x 845	

OUTSIDE ELBOW 45 ^{0}

TYPE	HEIGHT(h)	OVERALL DIM. X x Y	description
VEL16	60	257 x 518	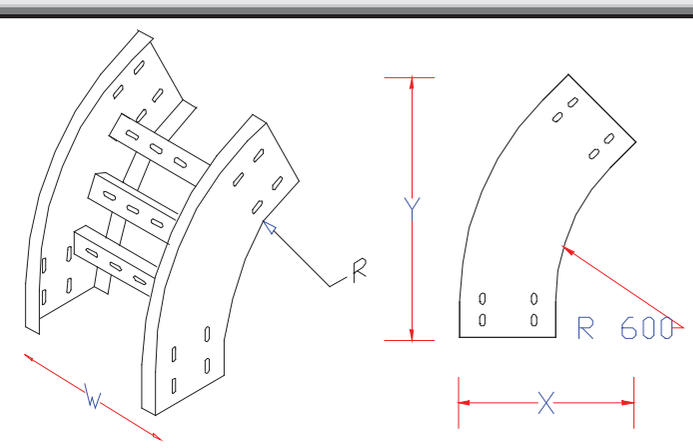
VEL17	90	287 x 539	
VEL18	125	322 x 564	
VEL19	150	347 x 582	
VEL20	175	372 x 600	

Vertical Tee

TYPE	HEIGHT(h)	OVERALL DIM. X x Y	drawing
VTL21	60	790 x 1460	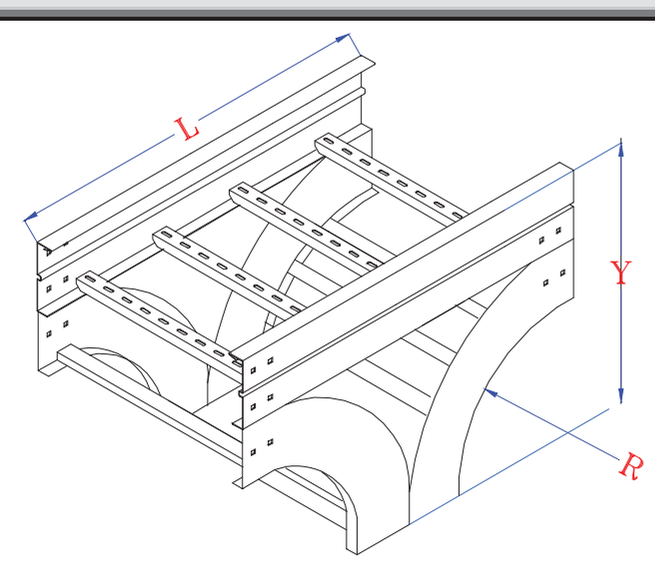
200	90	850 x 1520	
300	125	920 x 1590	
400	150	970 x 1640	
500	175	1020 x 1690	

CABLE LADDER

JOINT

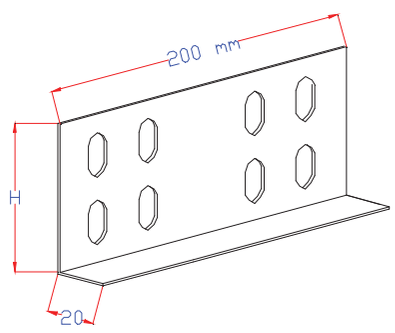

L-type

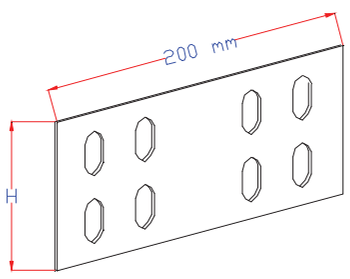

Fish type

Straight Connection.

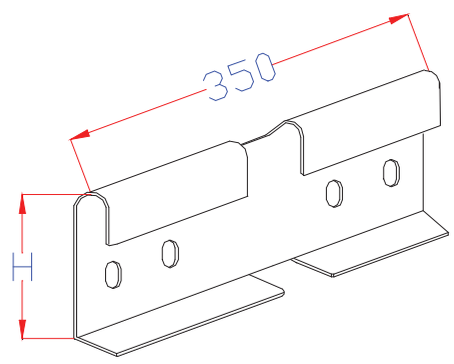

Horizontal adjustable

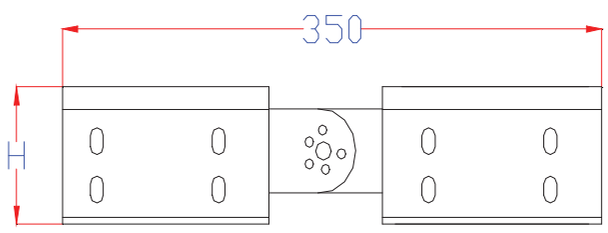

Vertical adjustable.

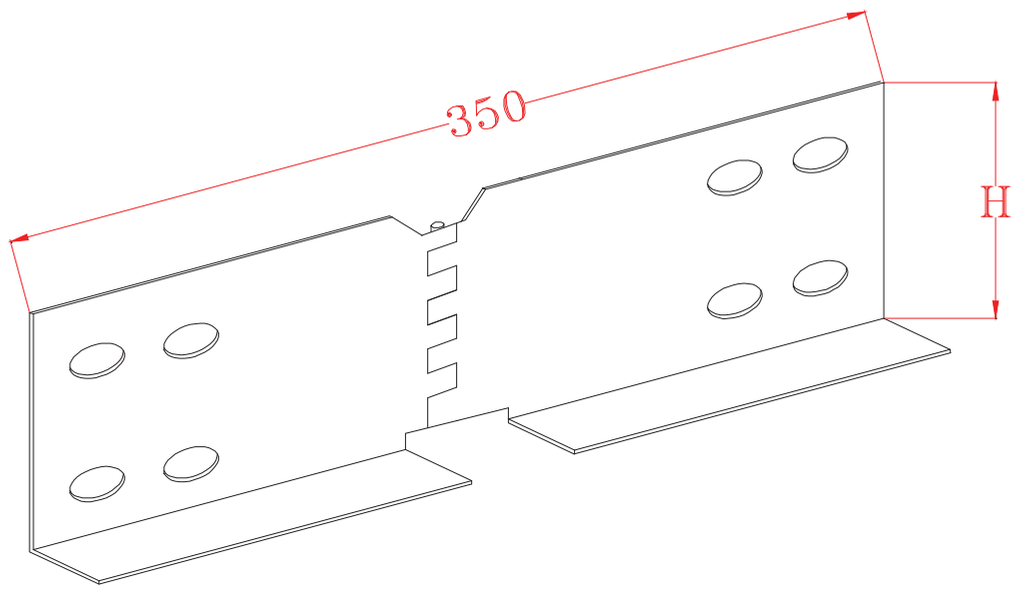

Horizontal adjustable.

CABLE LADDER

Straight Element.

- Material. (steel , stainless steel and aluminum)
- Finish.

5. Hot- dip galvanized after fabrication according to DIN 50976 –zinc coating thickness on one side 50-60 µm (350-420 gm²).
6. Pre galvanized according to DIN 17162 on both sides 27 5 gm/m².
3. P. v. c coated. 4. Epoxy

- 60 & 90 & 110 & 125 & 150 & 175 mm Standard height of side.
- 2000 & 3000 & 6000 mm Standard Length.
- All Dimensions in (mm).

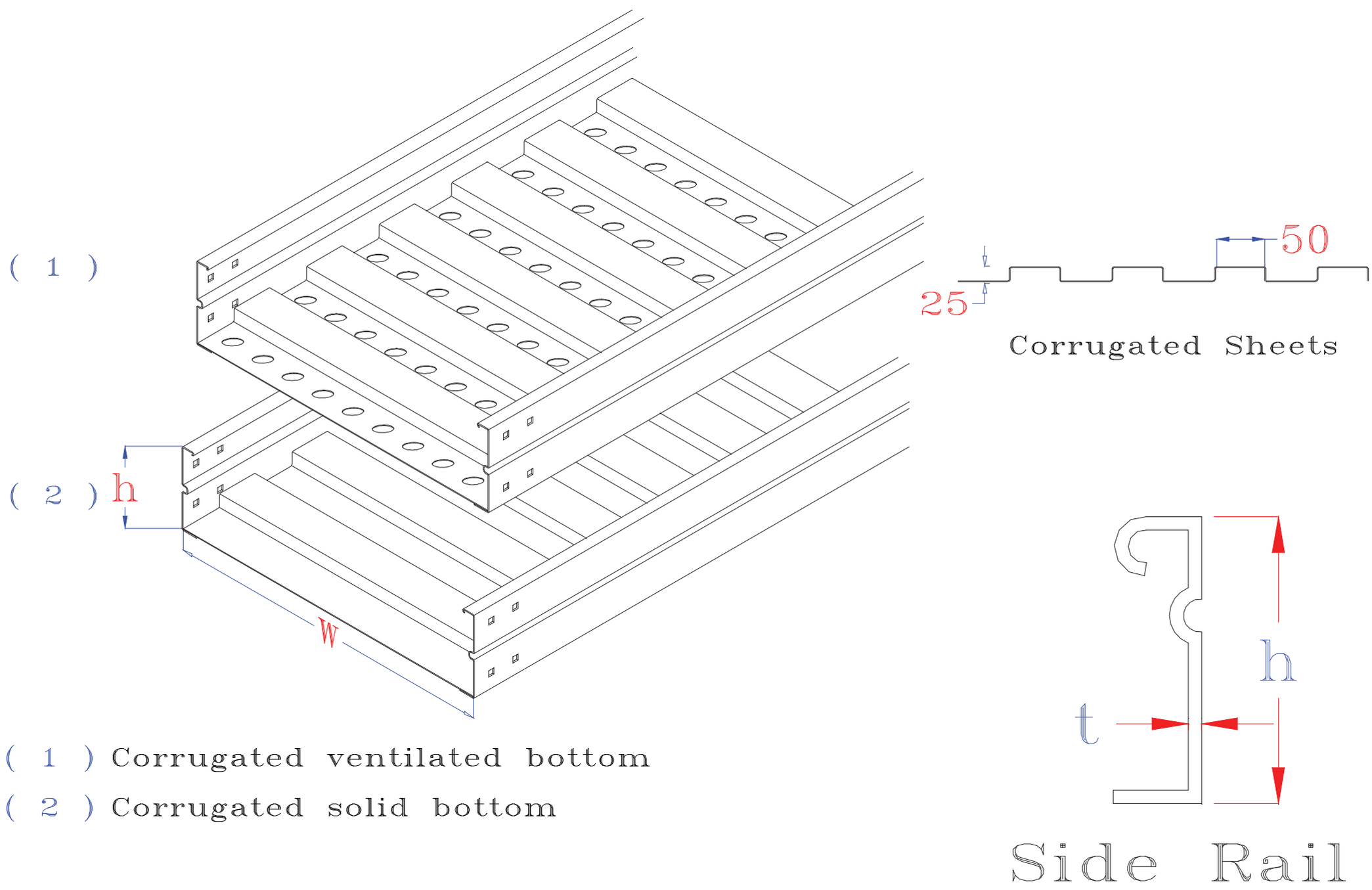

WIDTH (W)	100 & 200 & 300 & 400 & 500 & 600 & 700 & 800 & 900 mm.
RANG SPACE (a)	150 & 200 & 225 & 250 & 300 mm.
RANG (b x c)	(50 X 25) mm.

CABLE LADDER

CABLE TROUGH FITTING

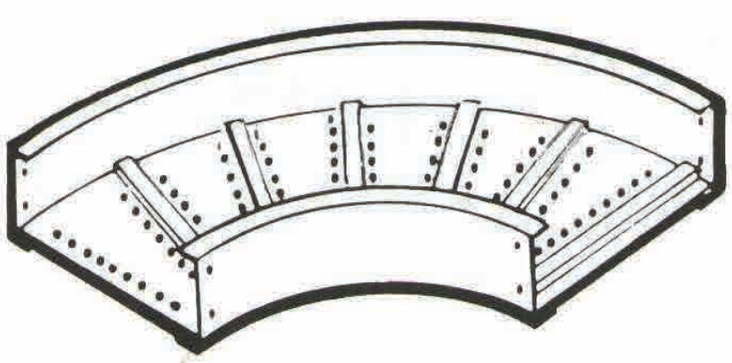

Horizontal Elbow

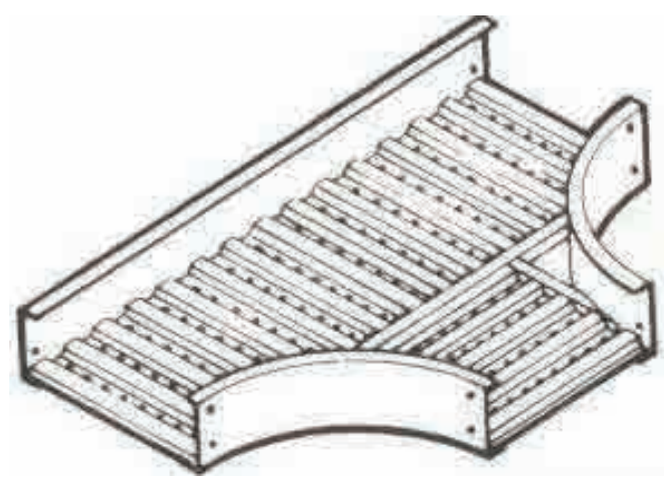

Tee

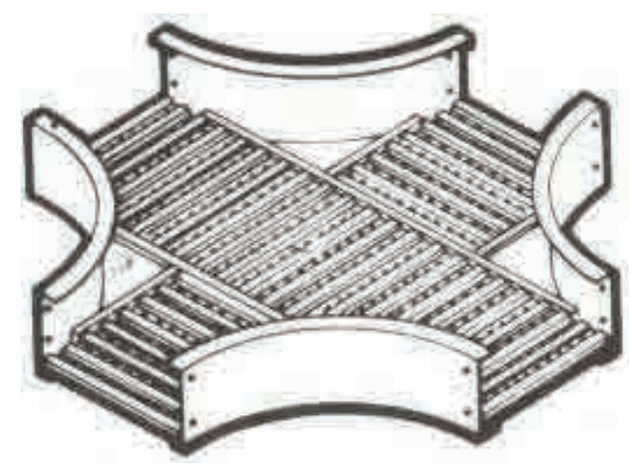

Cross

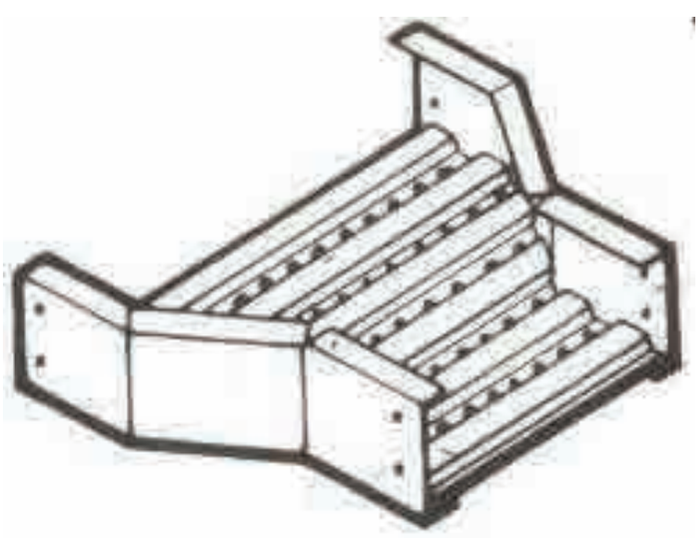

Offset Reducer

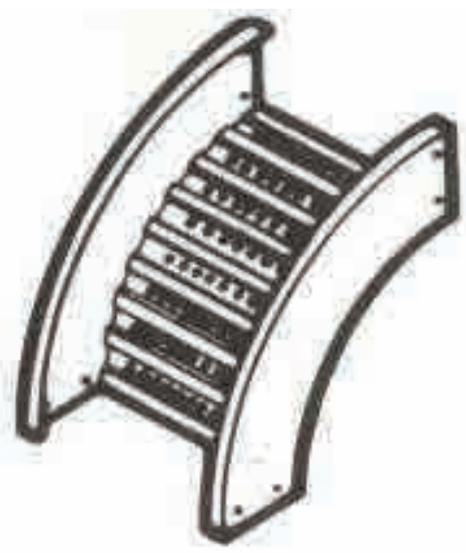

Outside Elbow

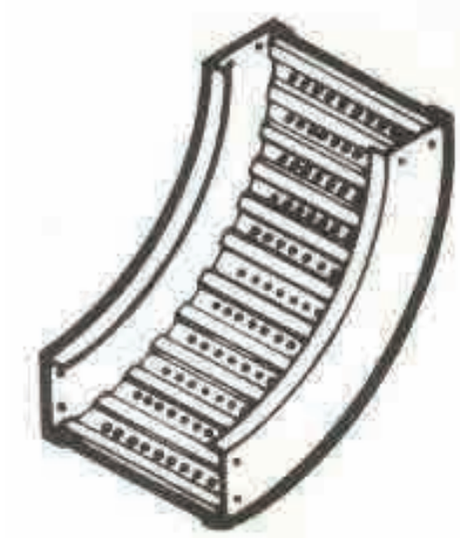

Inside Elbow

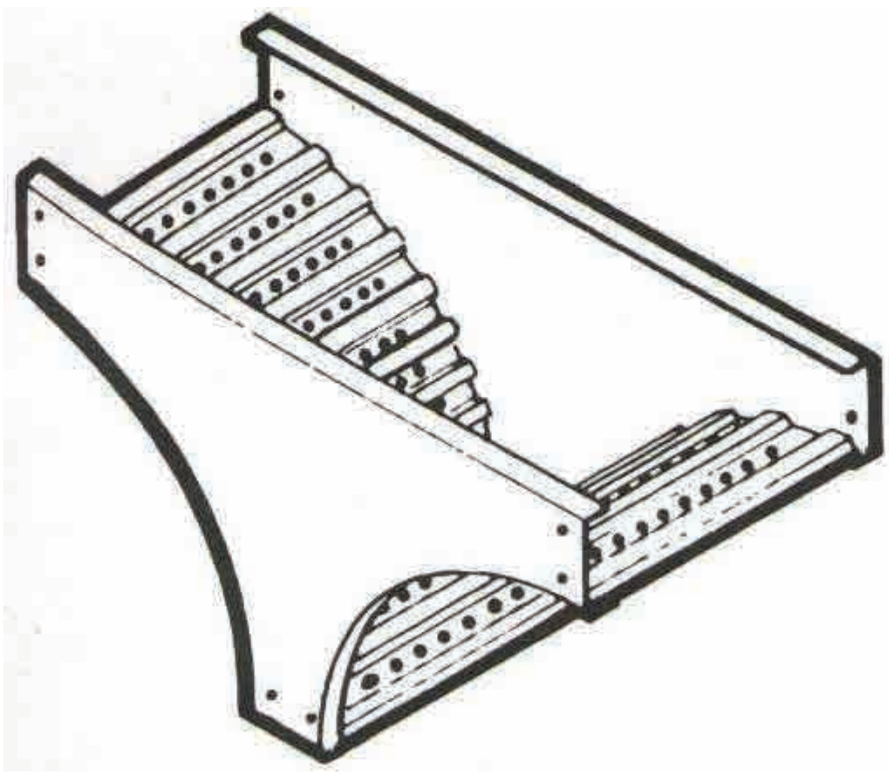

Vertical Tee

CABLE BASKET

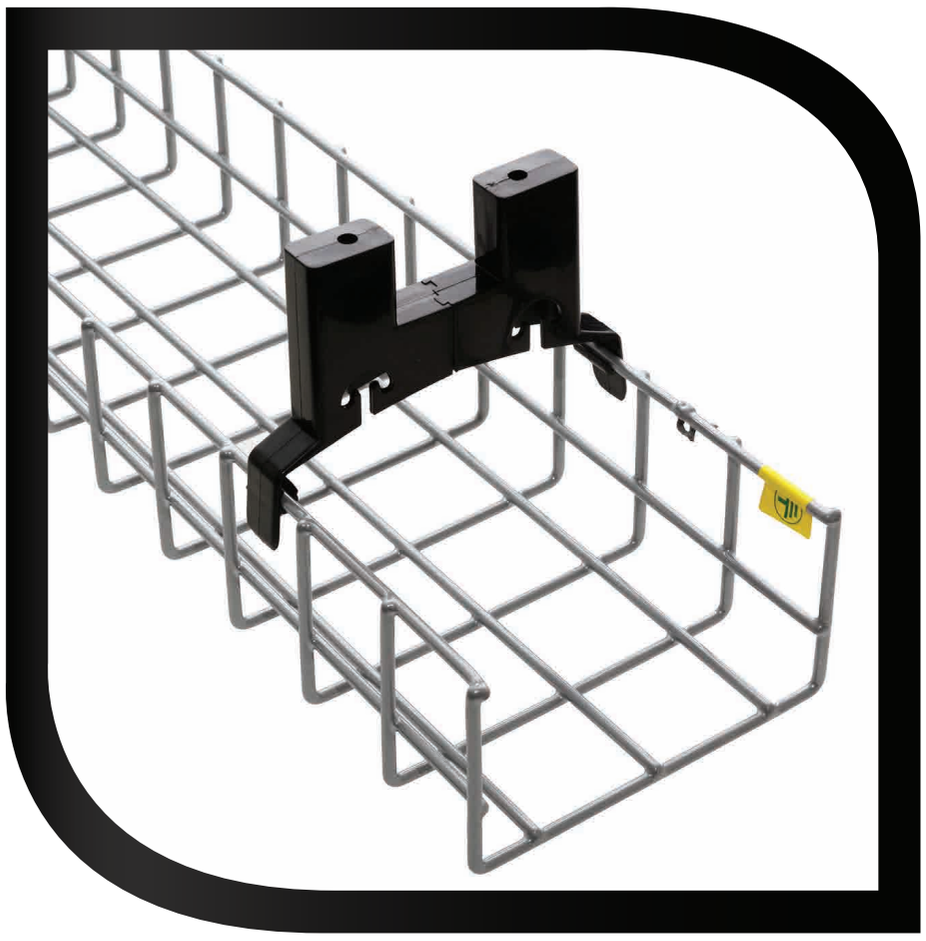

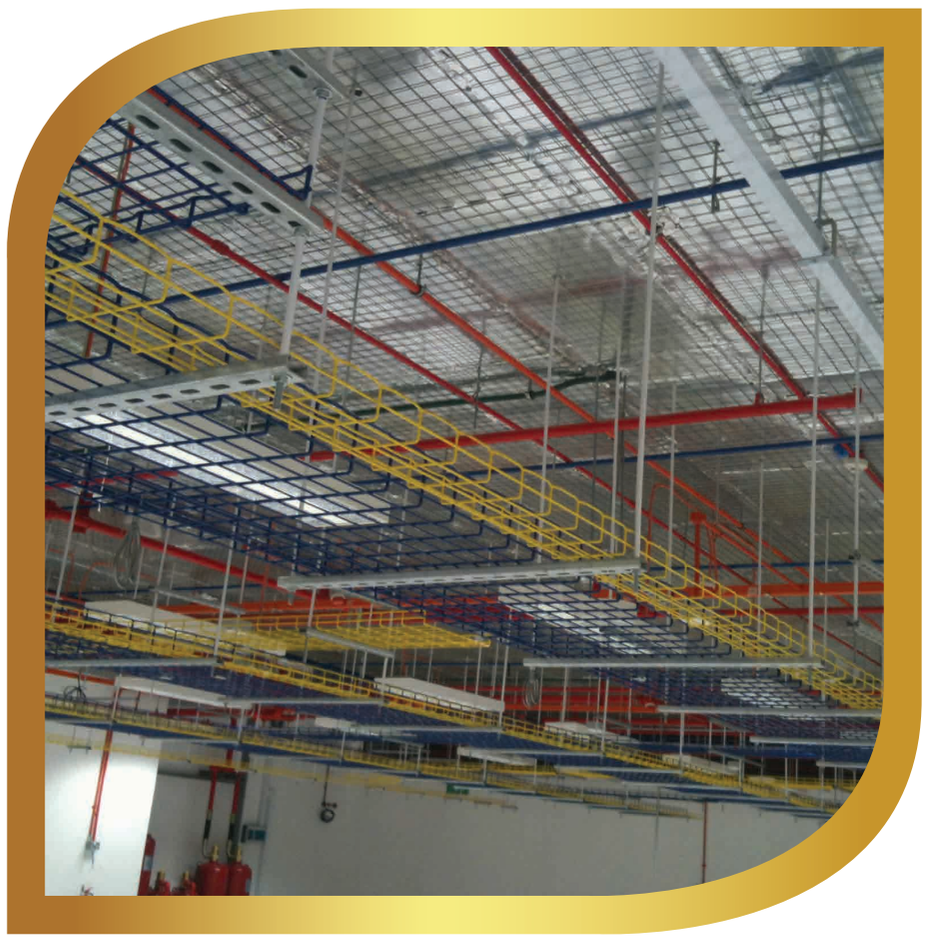

Basket Tray
Divide Basket Tray
Cover and Feet
Basket Tray with Bracket
Joint Clamp - Clamp Bolt - Clamp Plate - Connector

CABLE BASKET

- Material. (steel , stainless steel and aluminum)
- Finish.

9. Hot- dip galvanized after fabrication according to DIN 50976 –zinc coating thickness on one side 50-60 µm (350-420 gm²).
10. Pre galvanized according to DIN 17162 on both sides 275 gm/m².
3. P. v. c coated. 4. Epoxy

- 45 & 60 & 90 & 110 mm Standard side of height.
- 2000 & 3000 mm Standard Length.
- All Dimensions in (mm).

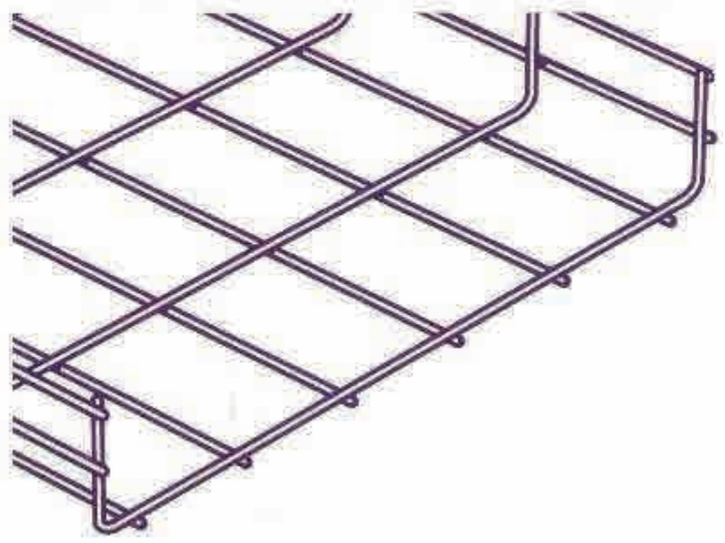	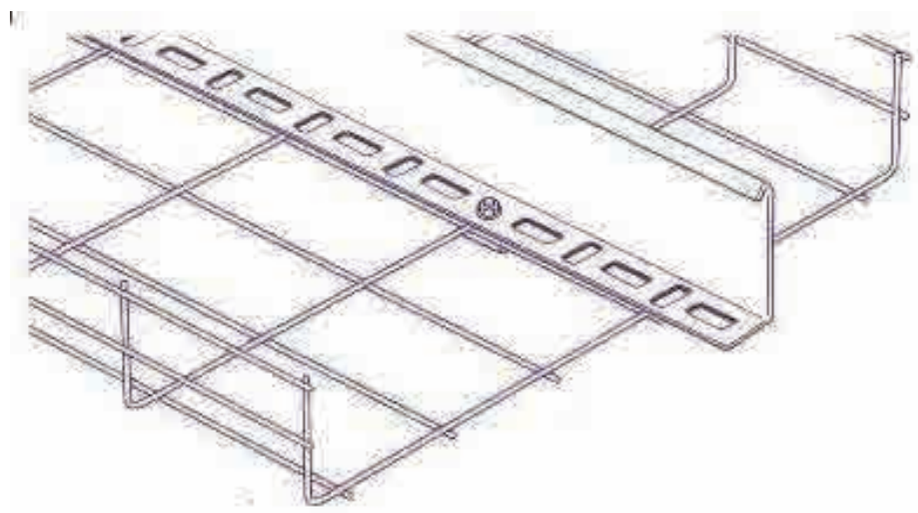
Basket Tray	Divide Basket Tray
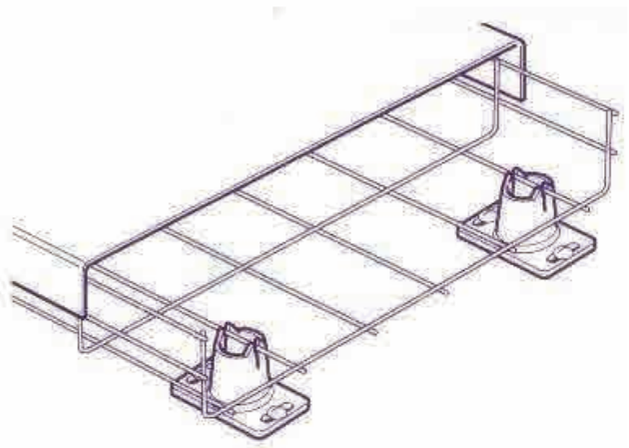	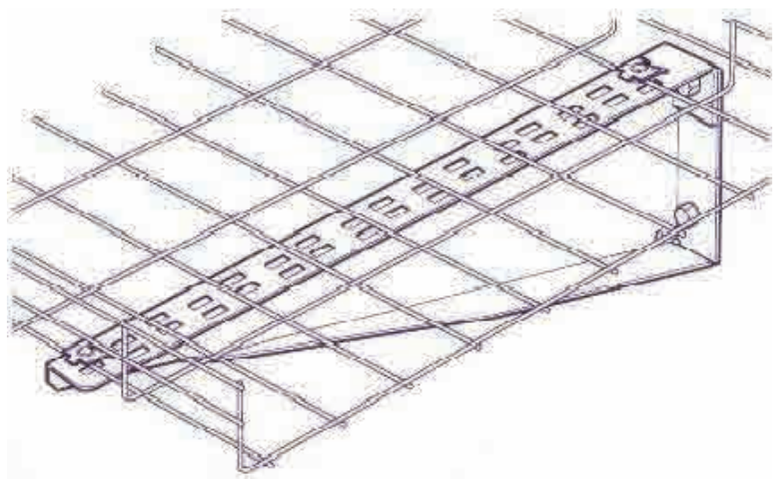
Covers and Feet	Basket Tray with bracket

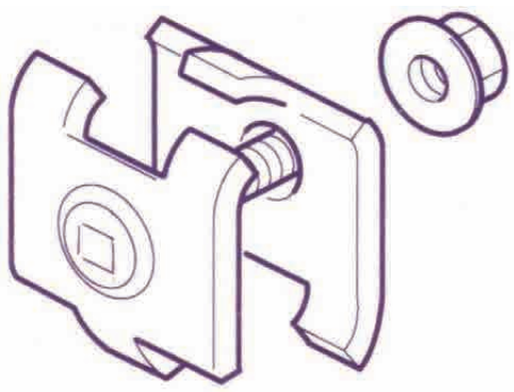	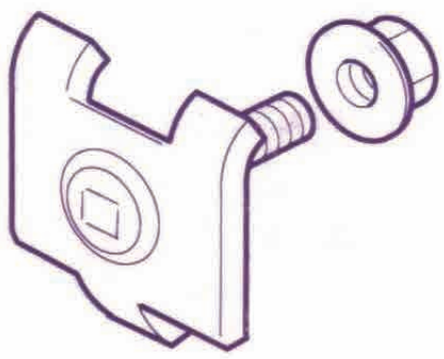	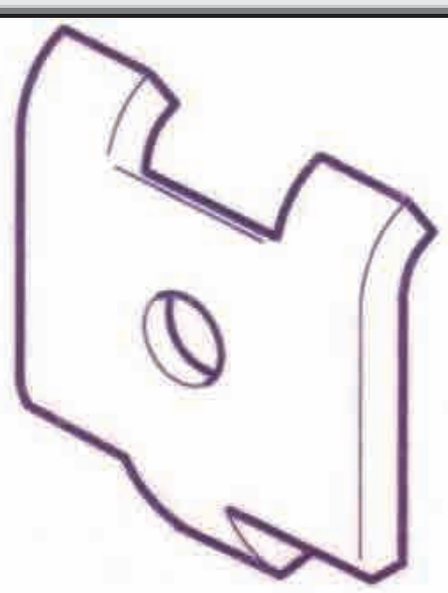	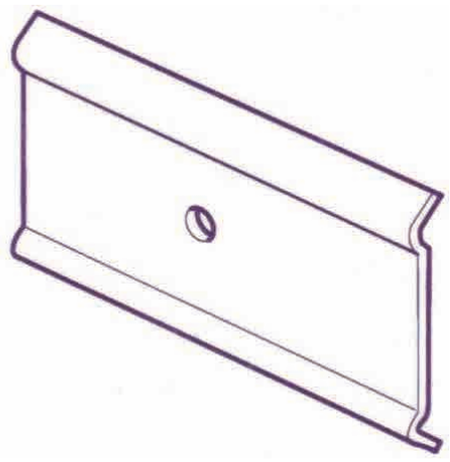
Joint Clamp	Clamp Bolt	Clamp Plate	Connector

KING STEEL

CABLE SUPPORT SYSTEM

Spring Nut	20
Ladeer Clamp	20
Gousset Single	20
Gousset Double	20
Single Channel Support	21
Double Channel Support	21
Light KZ Support Light	21
KZ Support Bracket	22
Medium Duty EDF Support	22
Medium Duty EDF Support With H.P.	22
Medium Duty EDF Support Bracket	23
Heavy Duty I Support	23
Heavy Duty I Support Head Plate	23
Heavy Duty I Support Bracket	24
I Support Connector	24
I Support Plate	24
Heavy Duty U Support	24
Heavy Duty U Support With Head Plate	25
Heavy Duty U Support Bracket (Wall Bracket)	25
Heavy Duty U Support Head Plate	25
Connectors	26
Accessories	27
Support Profile	28

Cable Support system

Spring Nut
Ladder Clamp
Gousset Single
Gousset Double

Spring Nut

Hot-Dip Galvanized Nut with Spring to be used
With ChannelSupport
Code CSSN100

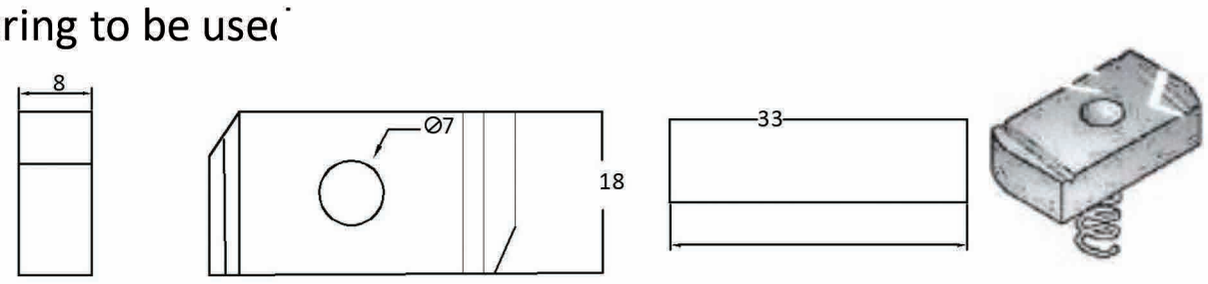

Ladder Clamp

Hot-Dip Galvanized rectangular clamp to mount cable ladderOn brackets
Code CSSN100

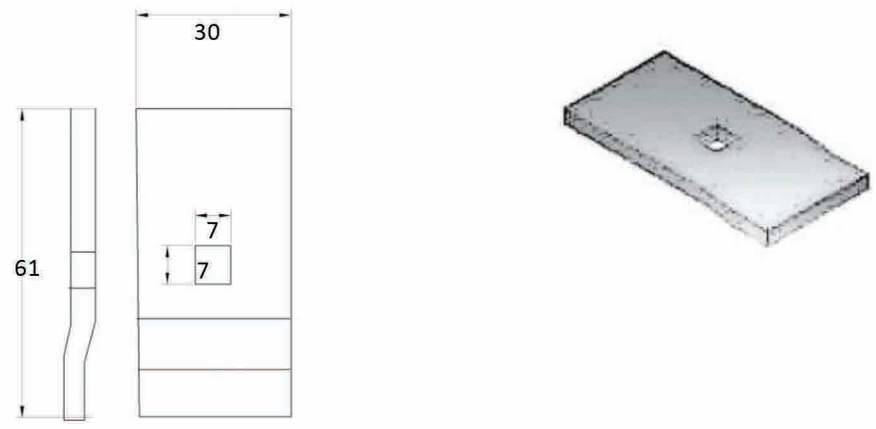

Gousset Single

Pre-Galvanized mounted plate with Light KZ support System To mount light KZ support on wall or ceiling
Code GDKZ500

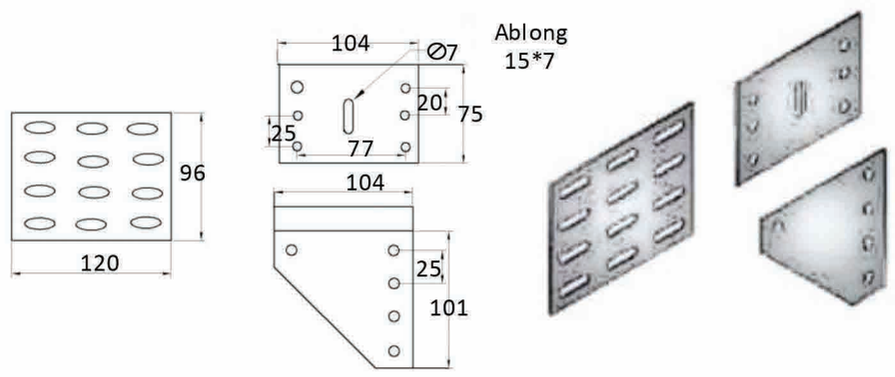

Gousset Double

Pre-Galvanized mounted plate with Light KZ support SystemsTo mount light KZ support on wall or ceiling
Code GDKZ600

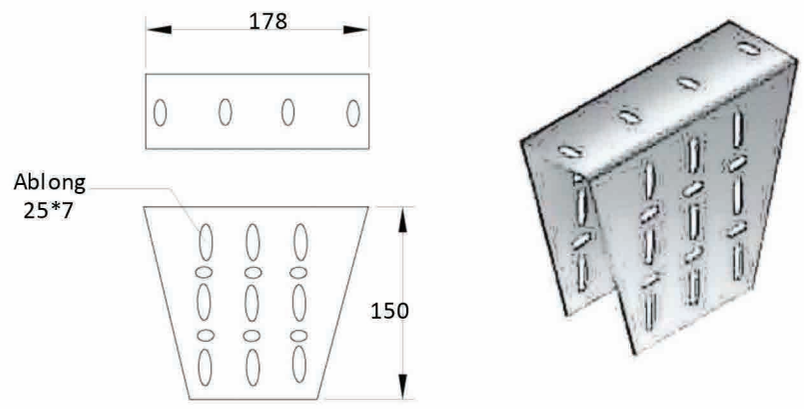

Hot-dip Galvanized acc 10 DIN 50976
Pre Galvanuzed acc to DIN EN 10142

Single Channel Support
Double channel Support
Light KZ Support

Single Channel Support

Type	Surface Coating	Width (W)mm	Height (H)Mm	Length (L)cm	Thickness mm
CSPG	Pre-Galvanized				
CSPP	Pre-galvanized+Electrostatic			20	
	Paint Finally coating			30	
CSHG	Hot-Dip Galvanized			40	
SHP	Hot-Dip Galvanized	42	27-42	50	2.5mm for hot dip galvanized
	+Electrostatic paint finally Coating			Up to200	
CSSS	Stainless steel				

Code	Type	Width	hieght	Length
Example	CSHG	42	27	150

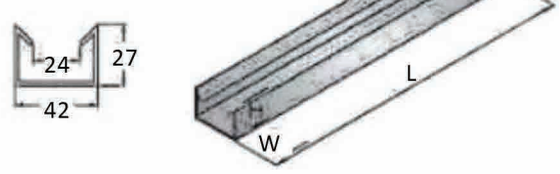

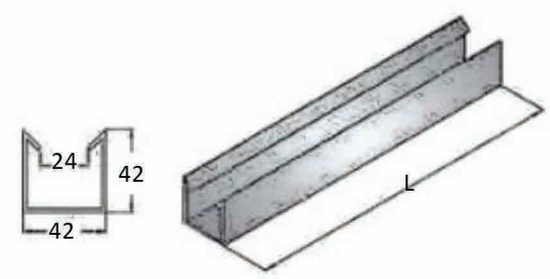

Double Channel Support

Type	Surface Coating	Width (W)mm	Height (H)Mm	Length (L)cm	Thickness mm
CSPG	Hot-Dip Galvanized			20	
				30	
CSPP	Hot-Dip Galvanized	42	54-84	40	2.5mm for Hot-dip Galvanized
				50	2.0 mm For others
	+Electrostatic paint finally Coating			Up to 200	
CSHG	Stainless steel				

Code	Type	Width	hieght	Length
Example	CSHG	42	27	150

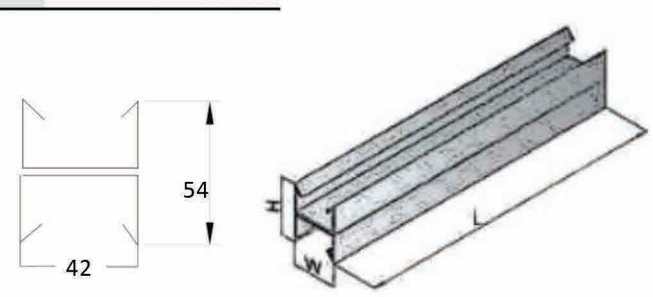

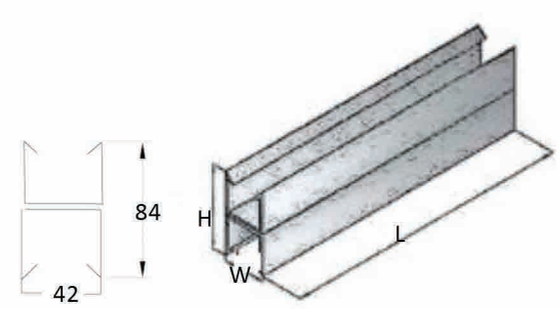

Light KZ Support

Type	Surface Coating	Length (L)cm	Thickness mm
KZPG	Pre-Galvanized	20	
		30	
KZPP	Pre-Galvanized	40	2.0
	+Electrostatic paint finally Coating	50	
KZSS	Stainless steel	Up to 200	

Code	Type	Length
Example	CSHG	150

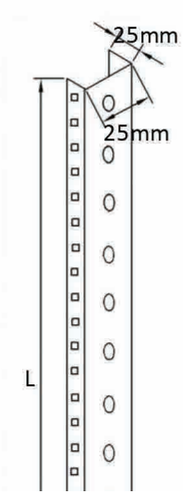

Hot-dip Galvanized acc 10 DIN 50976
Pre Galvanuzed acc to DIN EN 10142

Light KZ support Bracket
Medium Duty EDF Support
Medium Duty EDF Support with H.P.

Light KZ support Bracket

Type	Surface Coating	Length (L)cm	Thickness mm
BKZPG	Pre-Galvanized	15 25 35 45 55 65	2.0
BKZPP	Pre-Galvanized +Electrostatic paint finally Coating		
BKZSS	Stainless steel		

Code	Type	Length
Example	BKZPG	45

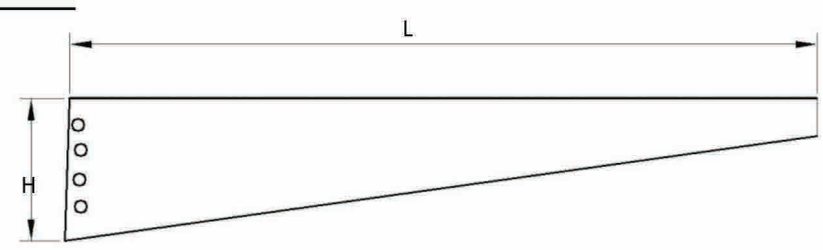

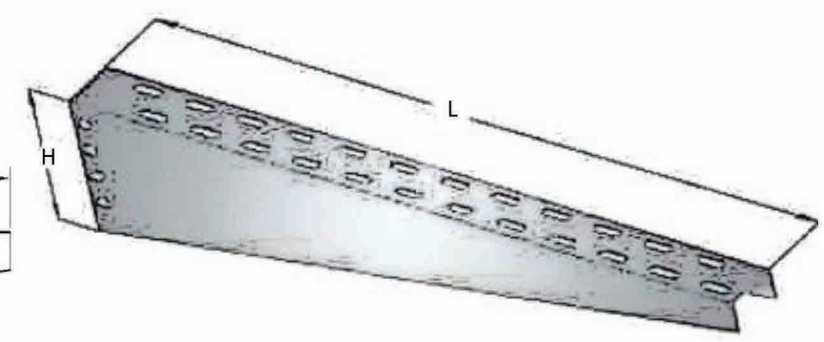

Medium Duty EDF Support

Type	Surface Coating	Length (L)cm	Thickness mm
EDFHG	Pre-Galvanized	20 30 40 50 Up to 300	2.0
EDFHP	Pre-Galvanized +Electrostatic paint finally Coating		
EDFSS	Stainless steel		

Code	Type	Length
Example	EDFHG	40

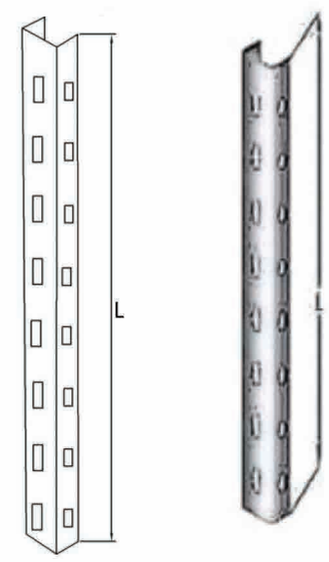

Medium Duty EDF Support with Head Plate

Type	Surface Coating	Length (L)cm	Thickness mm
EDFWHG	Hot-Dip Galvanized	20 30 40 50 Up to 200	2.0
EDFWHP	Hot-Dip Galvanized +Electrostatic paint finally Coating		
EDFSS	Stainless steel		

Code	Type	Length
Example	EDFWHG	40

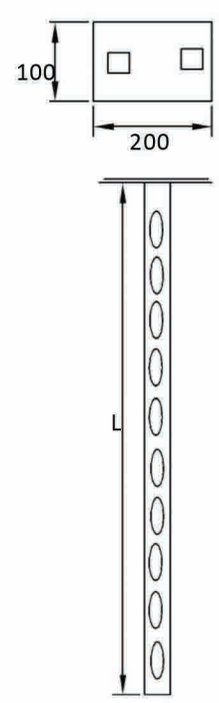

Hot-dip Galvanized acc 10 DIN 50976
Pre Galvanuzed acc to DIN EN 10142

Medium Duty EDF Support Bracket

Type	Surface Coating	Length (L)cm	Thickness mm
BEDFHG	Hot-Dip Galvanized	25 35 45 55 65 75	3.0
BEDFHP	Hot-Dip Galvanized +Electrostatic paint finally Coating		
BEDFSS	Stainless steel		

Code	Type	Length
Example	BEDFHG	45

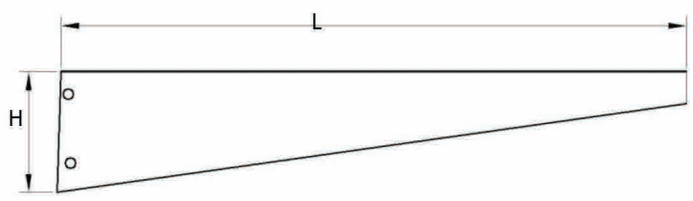

Heavy Duty Support

Type	Surface Coating	Length (L)cm	Profile Size mm
IHG	Hot-Dip Galvanized	20 30 40 50 Up to 300	Section 100*55
IHP	Hot-Dip Galvanized Hot-Dip Galvanized + Electrostatic Paint Finally Coating		

Code	Type	Length
Example	IHG	100

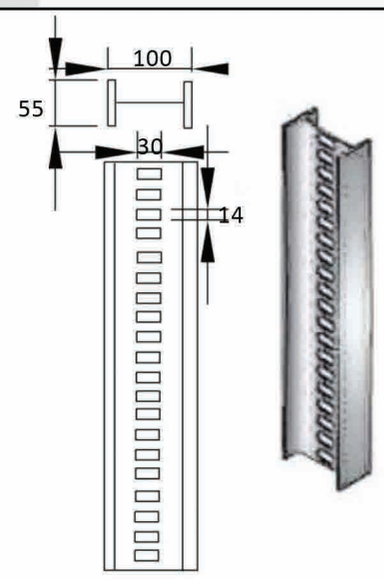

Heavy Duty Support Head Plate

Type	Surface Coating	Length (L)cm	Thickness mm
WIHG	Hot-Dip Galvanized	20 30 40 50 Up to 200	I Section 100*55
WIHP	Hot-Dip Galvanized +Electrostatic paint finally Coating		

Code	Type	Length
Example	WIHG	200

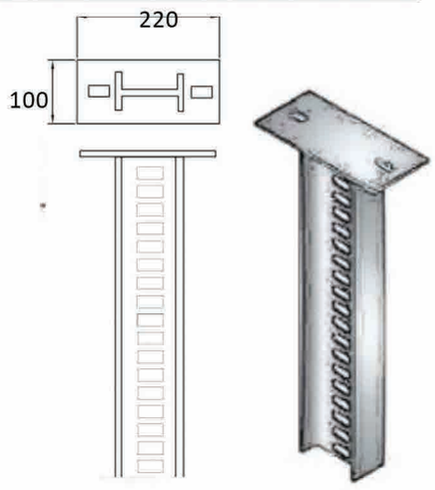

Hot-dip Galvanized acc 10 DIN 50976
Pre Galvanuzed acc to DIN EN 10142

Heavy Duty I Support Bracket
I Support Connector
I Support Plate
Heavy Duty U Support

Heavy Duty I Support Bracket

Type	Surface Coating	Length (L)cm	Thickness mm
BIHG	Hot-Dip Galvanized	21 31 41 51 61 71 81	I Section 100*55
BIHP	Hot-Dip Galvanized		
	Hot-Dip Galvanized + Electrostatic		
	Paint Finally coating		

Code	Type	Length
Example	BEDFHG	45

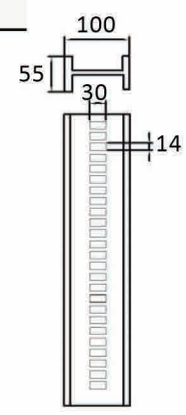

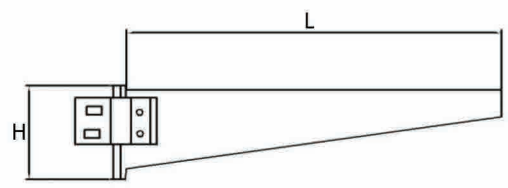

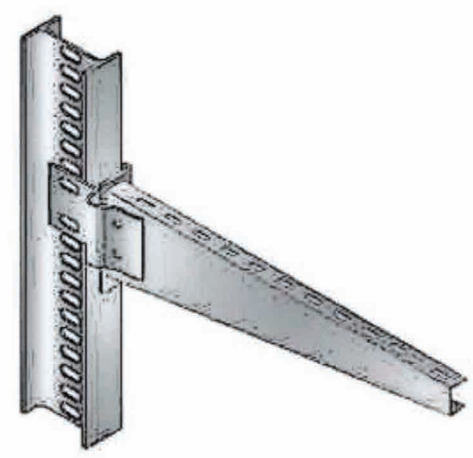

I Support Connector

Hot-Dip Galvanized Connector To connect I-Support in Straight Direction
Code ISCE200

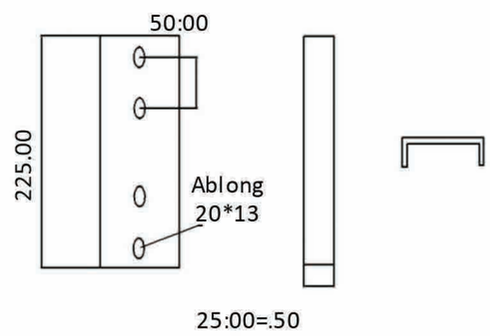

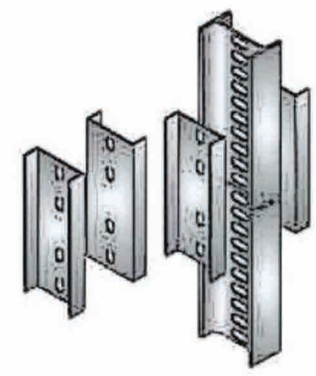

I Support Plate

Hot-Dip Galvanized Connector To connect I-Support in Vertica Direction
Code ISPE300

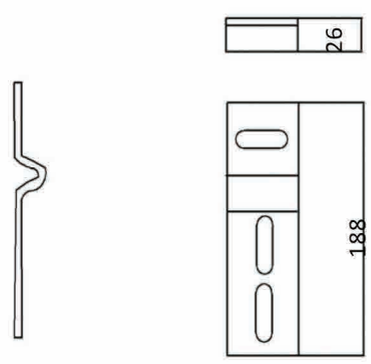

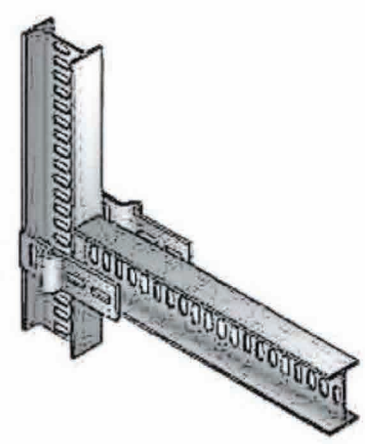

Heavy Duty U Support

Type	Surface Coating	Length (L)cm	Thickness mm
UHG	Hot-Dip Galvanized	20 30 40 50 Up to 300	3.0
UHP	Hot-Dip Galvanized +Electostatic paint finally coating		
USS	Stainless steel		

Code	Type	Length
Example	UHG	200

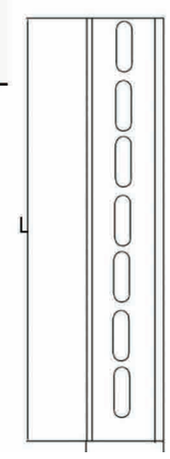

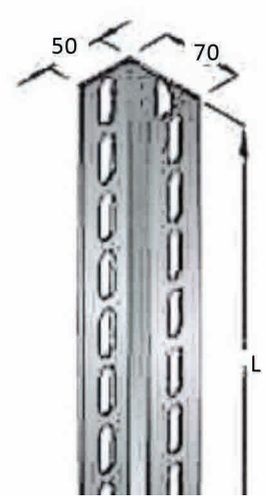

Hot-dip Galvanized acc 10 DIN 50976
Pre Galvanuzed acc to DIN EN 10142

Heavy Duty U Support with Head Plate

Type	Surface Coating	Length (L)cm	Thickness mm
WUHG	Hot-Dip Galvanized	20 30 40 50 Up to 200	3.0
WUHP	Hot-Dip Galvanized +Electrostatic paint Finally Coating		
WUSS	Stainless Steel		

Code	Type	Length
Example	WUHG	200

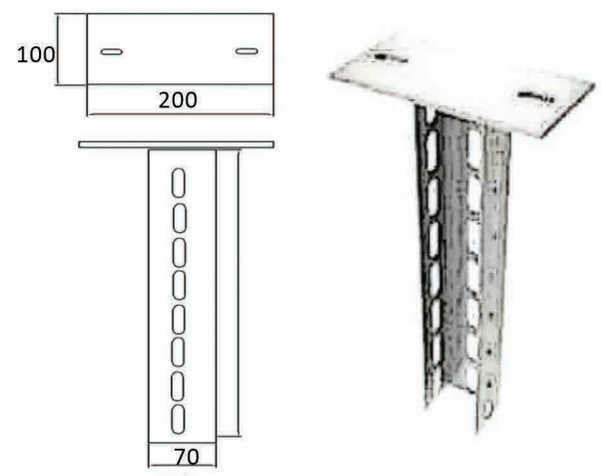

Heavy Duty U Support with Head Plate

Type	Surface Coating	Length (L)cm	Thickness mm
BUHG	Hot-Dip Galvanized	21 31 41 51 61 71 81	3.0
BUHP	Hot-Dip Galvanized +Electrostatic paint Finally Coating		
BUSS	Stainless Steel		

Code	Type	Length
Example	BUHG	51

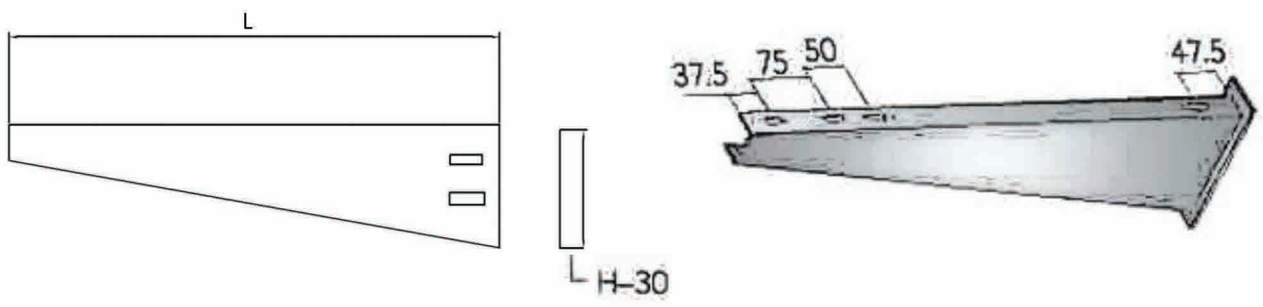

Heavy Duty U Support Head Plate

Type	Surface Coating
HPUHG	Hot-Dip Galvanized
HPUHP	Hot-Dip Galvanized +Electrostatic paint Finally Coating
HPUSS	Stainless Steel

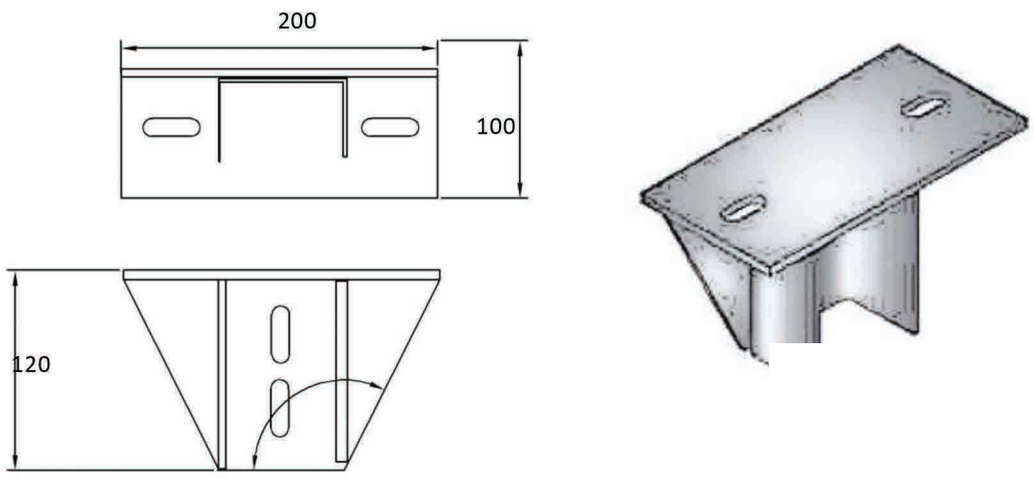

Hot-dip Galvanized acc 10 DIN 50976
Pre Galvanuzed acc to DIN EN 10142

Code	Sizes	Profiles
	Straight Connector	
S040102	200*25mm	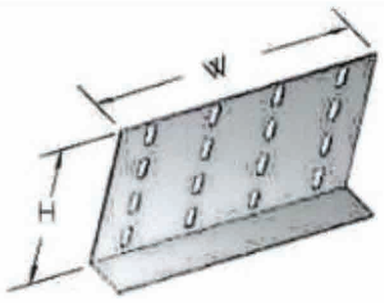
S040105	200*50mm	
S040106	200*60mm	
S040107	200*75mm	
S040110	200*100mm	
S040111	200*110mm	
S040116	200*160mm	
	Angle connector	
A040202	200*25mm	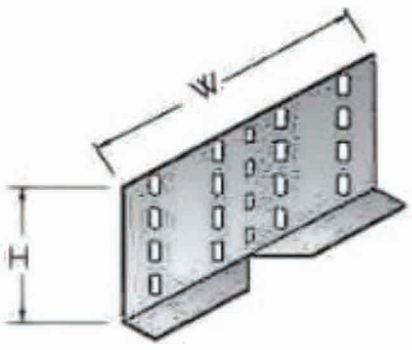
A040205	200*50mm	
A040206	200*60mm	
A040207	200*75mm	
A040210	200*100mm	
A040211	200*110mm	
A040216	200*160mm	
	Reducer Plate	
R021002	100*25mm	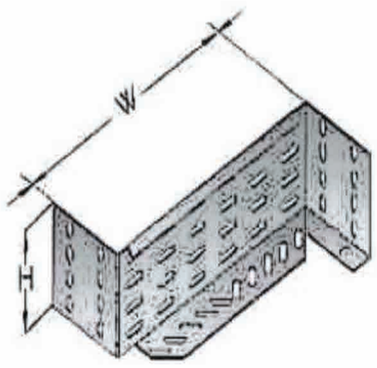
R021005	100*50mm	
R021007	100*75mm	
R021010	100*100mm	
R022002	200*25mm	
R022005	200*50mm	
R022007	200*75mm	
R022010	200*100mm	
R023002	300*25mm	
R023005	300*50mm	
R023007	300*75mm	
R023010	300*100mm	
	End plate	
E081002	100*25mm	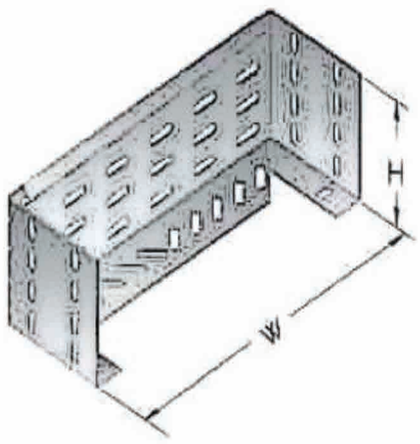
E081005	100*50mm	
E081107	100*75mm	
E081010	100*100mm	
E082002	200*25mm	
E082005	200*50mm	
E082007	200*75mm	
E082010	200*100mm	
E083002	300*25mm	
E083005	300*50mm	
E082007	300*75mm	
E082010	300*100mm	
E083005	400*50mm	
E083007	400*75mm	
E08310	400*100mm	
E084005	500*50mm	
E085007	500*75mm	
E085010	500*100mm	
E086005	600*50mm	
E086007	600*75mm	
E086010	600*100mm	

Accessories

Code	Sizes	Profiles
	Flexible Vertical bend	
F031005	100*50mm	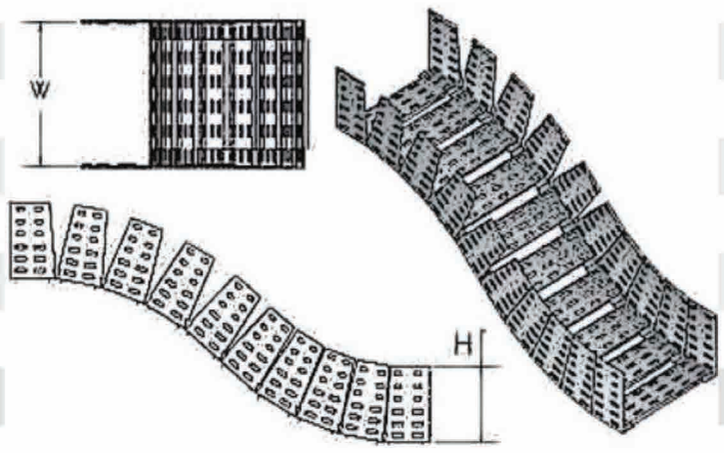
F032005	200*50mm	
F033005	300*50mm	
F031007	100*75mm	
F032007	200*75mm	
F033007	300*75mm	
F031010	100*100mm	
F032010	200*100mm	
F033010		
	Vertical Adjustable	
V040302	Height 25mm	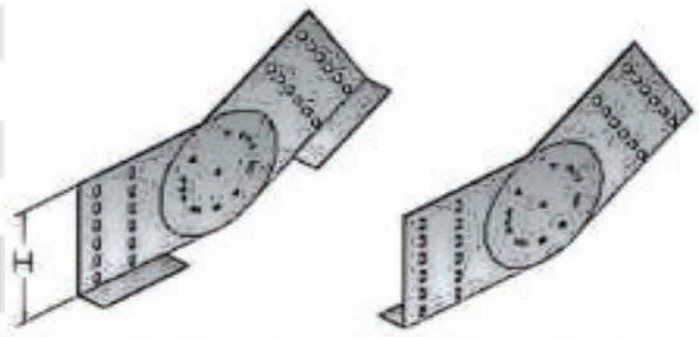
V040305	Height 50mm	
V040306	Height 60mm	
V040307	Height 75mm	
V040310	Height 100mm	
V040311	Height 110mm	
V040316	Height 160mm	
	Verotcal Adjustable Bend Element	
V020602	220*25mm	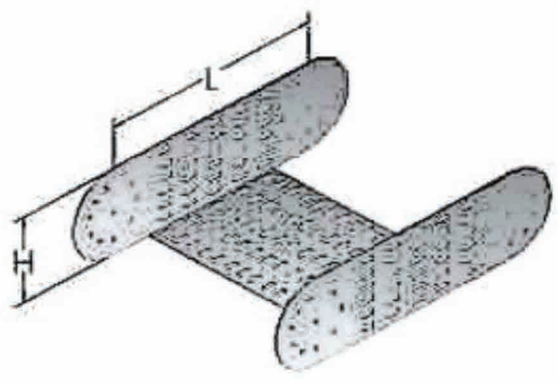
V020605	240*50mm	
V020607	260*75mm	
V020610	290*100mm	

Support Profile

Code	Sizes	Profiles
	Z Section	
Z010501	25*25*25	
Z010502	50*25*50	
Z010503	25*50*25	
Z010504	50*50*50	
	L Section	
L010521	25*25	
L050522	50*25*	
L050523	50*50	
	Omega Section	
O 010541	25*25*25	
O010541	25*25*50	
	U Section	
U010551	14*35	
U010552	14*40	
U010553	24*24	
U010554	14*50	
	Plate Section	
P010571	24*1.5	
P010572	48*2	
P010573	72*2	
P010574	30*3	
P010575	40*3	
	Divider Strip	
D 010591	26*25	
D010591	50*25	
D010591	75*25	
D010591	100*25	

TEES

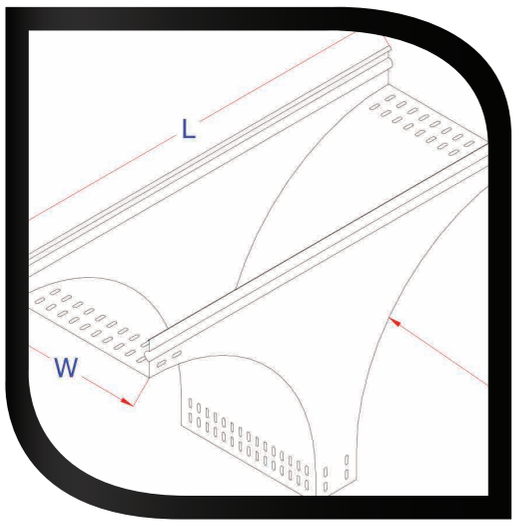

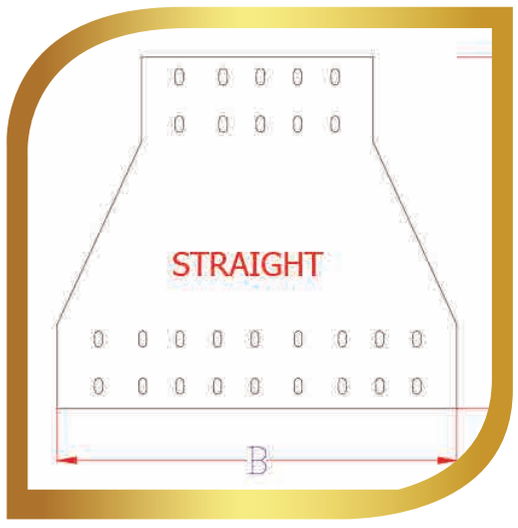

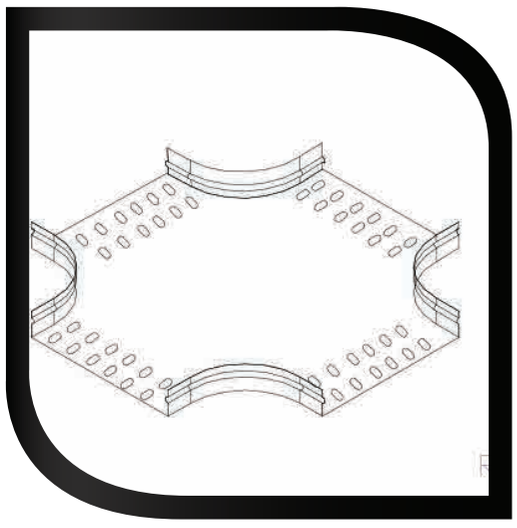

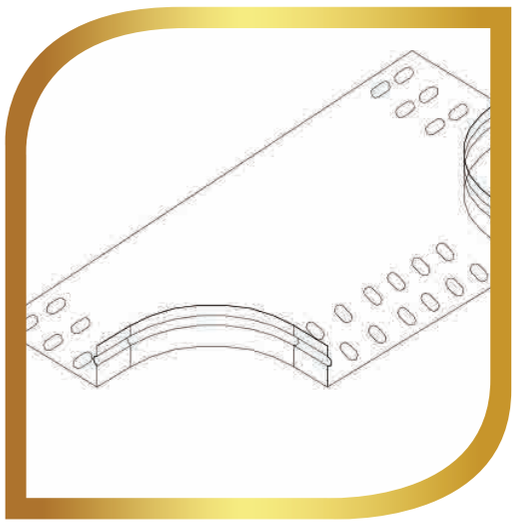

Vertical Tee

ELBOW

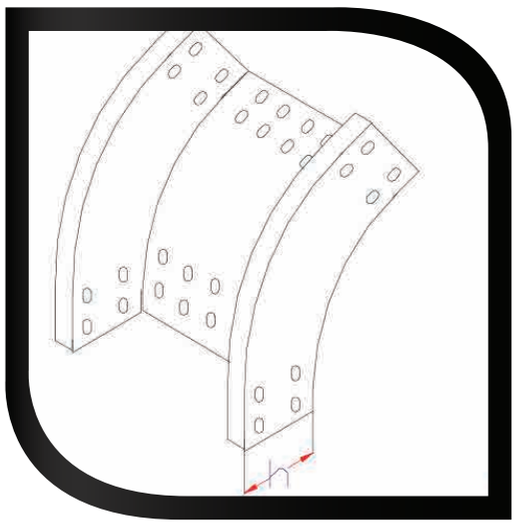

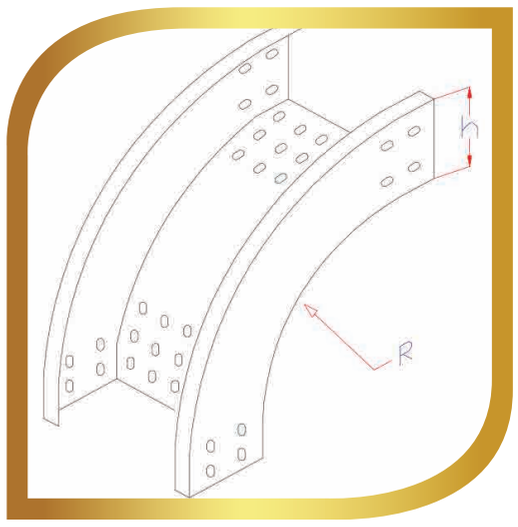

Outside Elbow

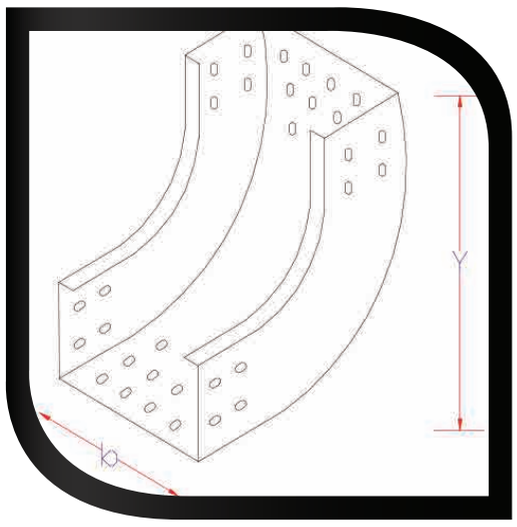

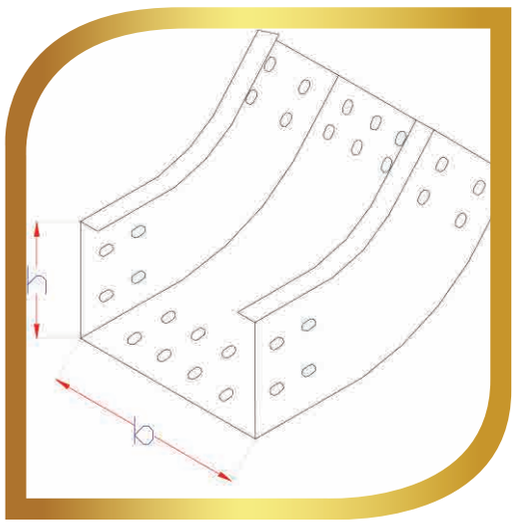

Inside Elbow

CONNECTION

BRACKETS

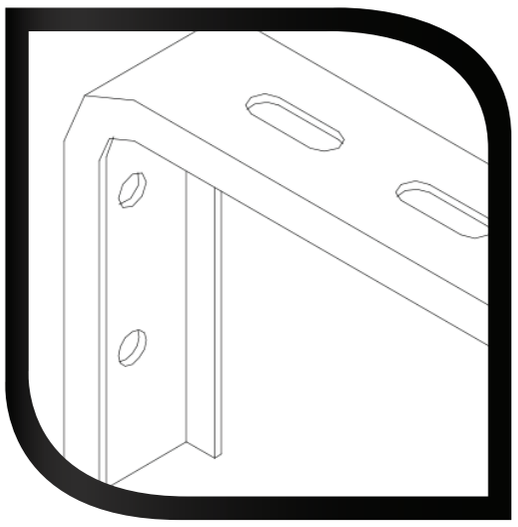

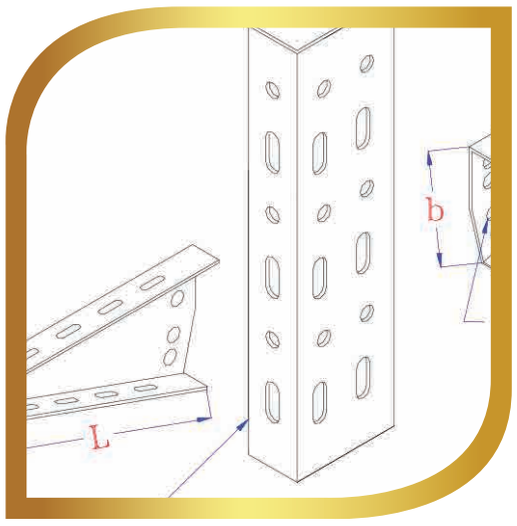

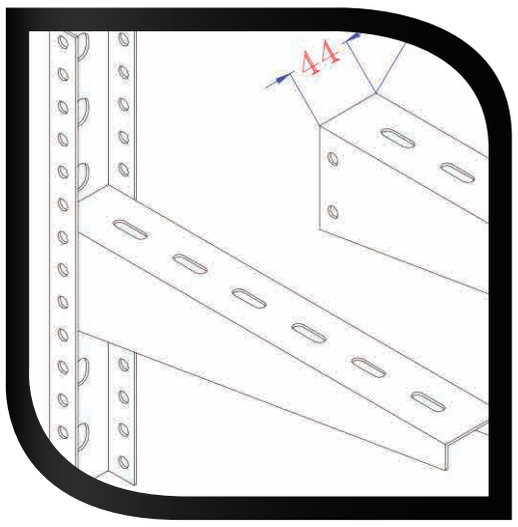

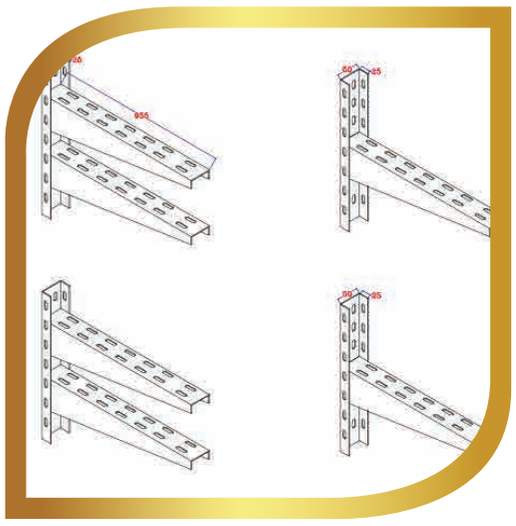

OMEGA

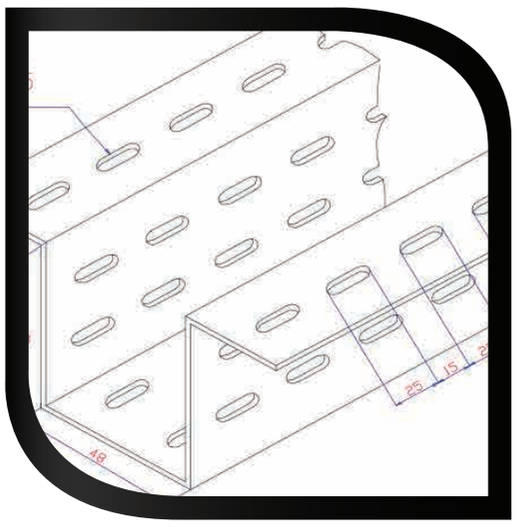

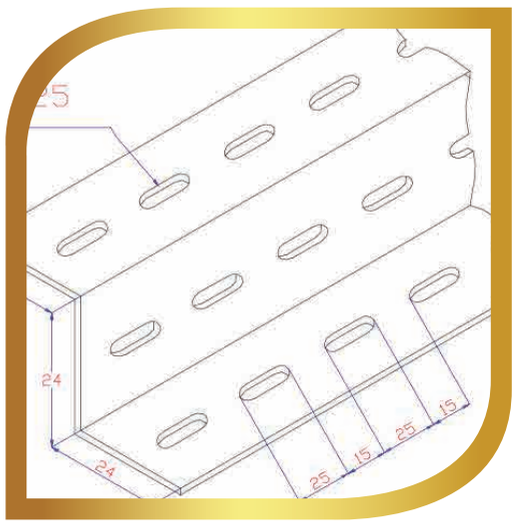

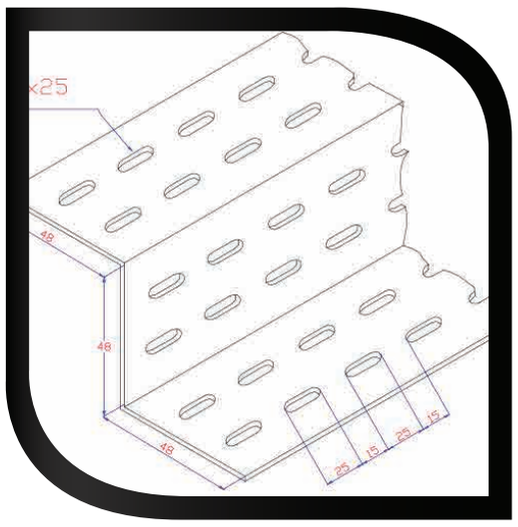

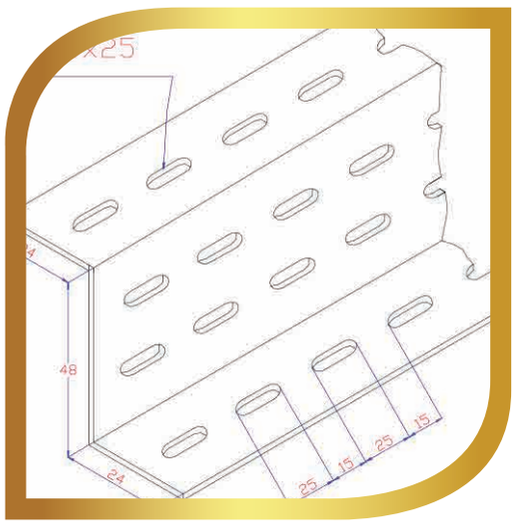

FIXING LADDER ON BRACKETS WITH A CLAMP

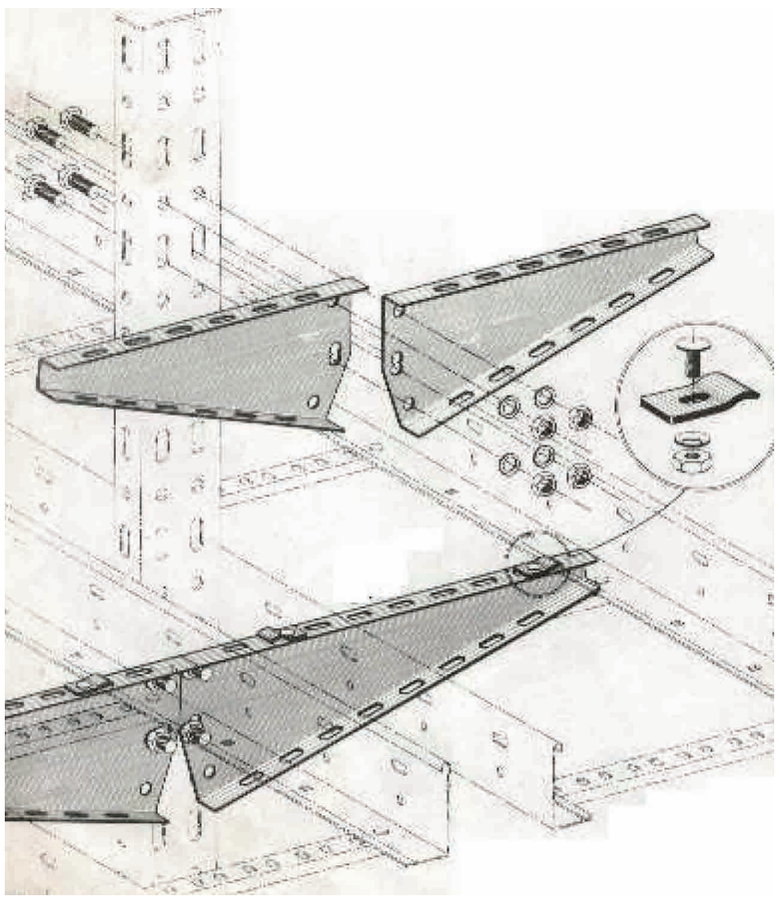

SPRING NUT

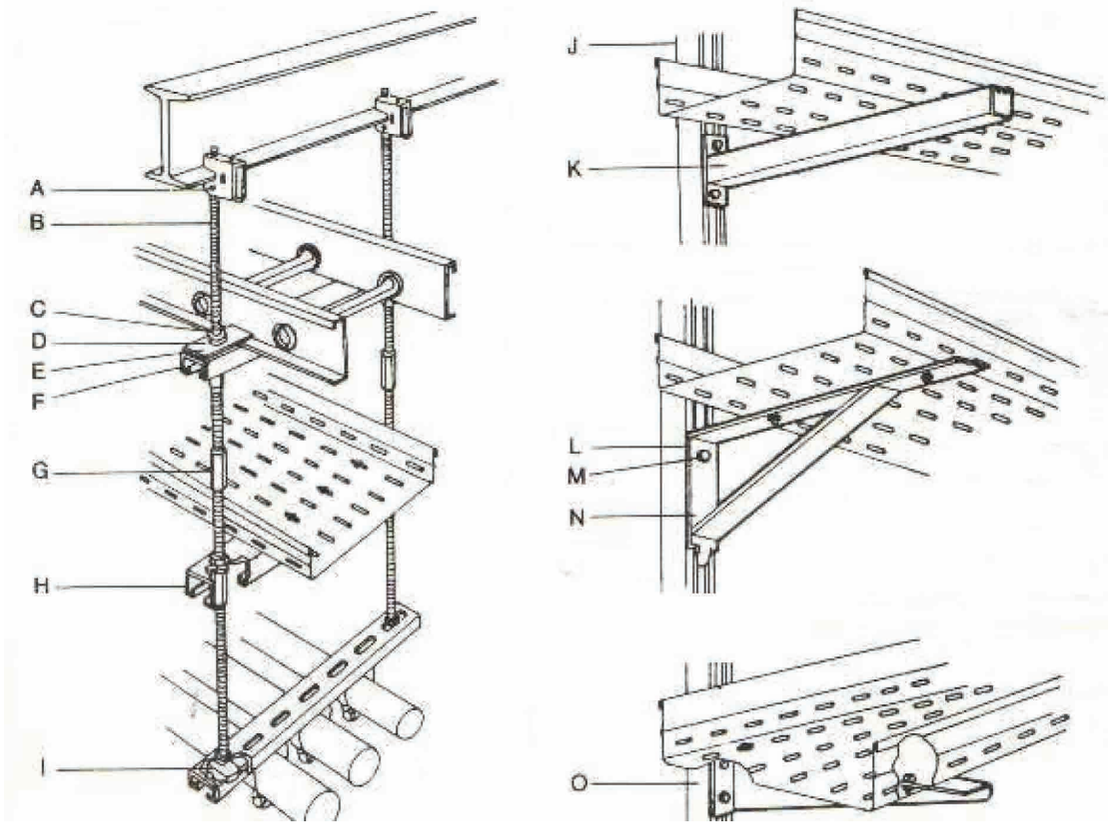

Channels

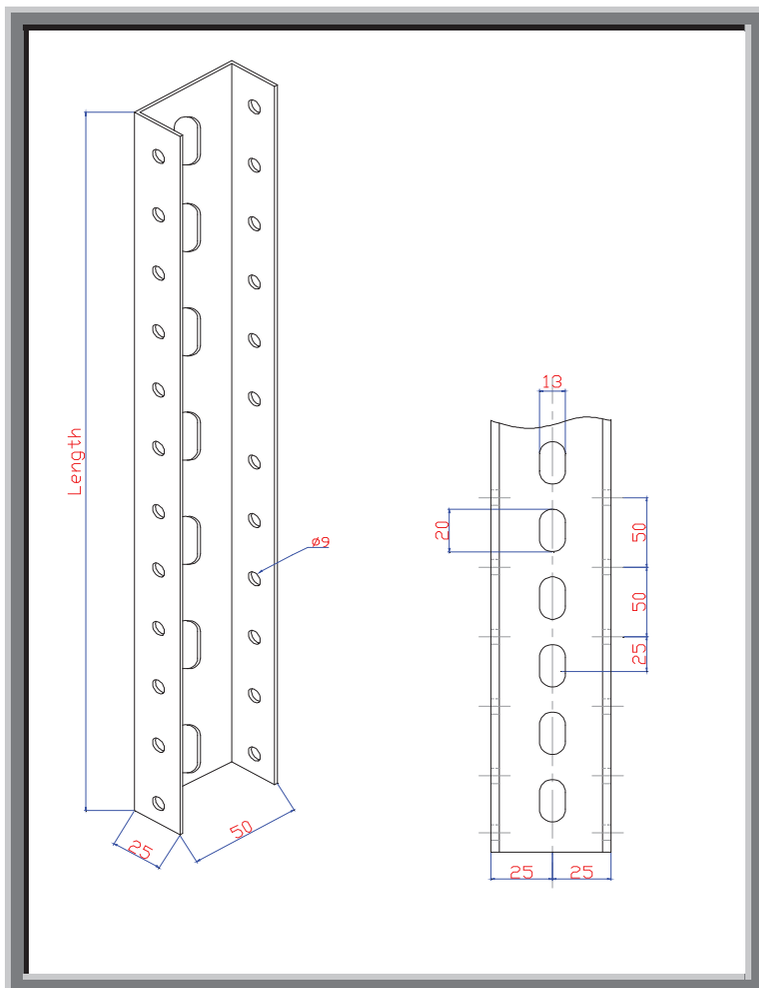

U – Channel 50x25 mm
thick 2 - 3 mm

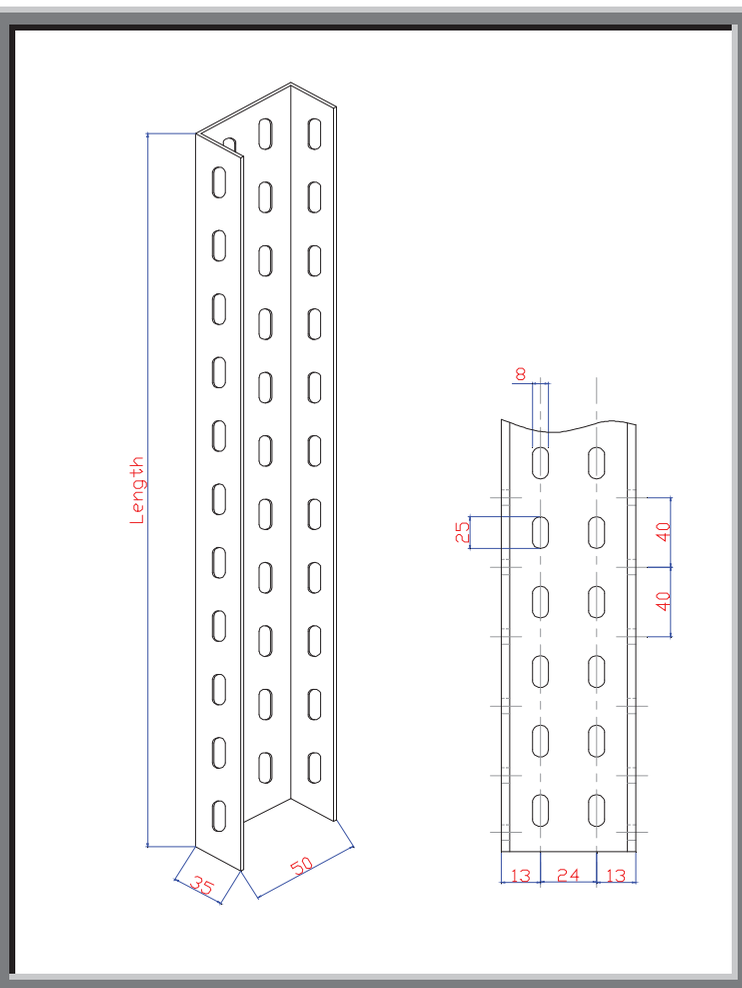

U – Channel 50x35 mm
thick 1.5 - 2 mm

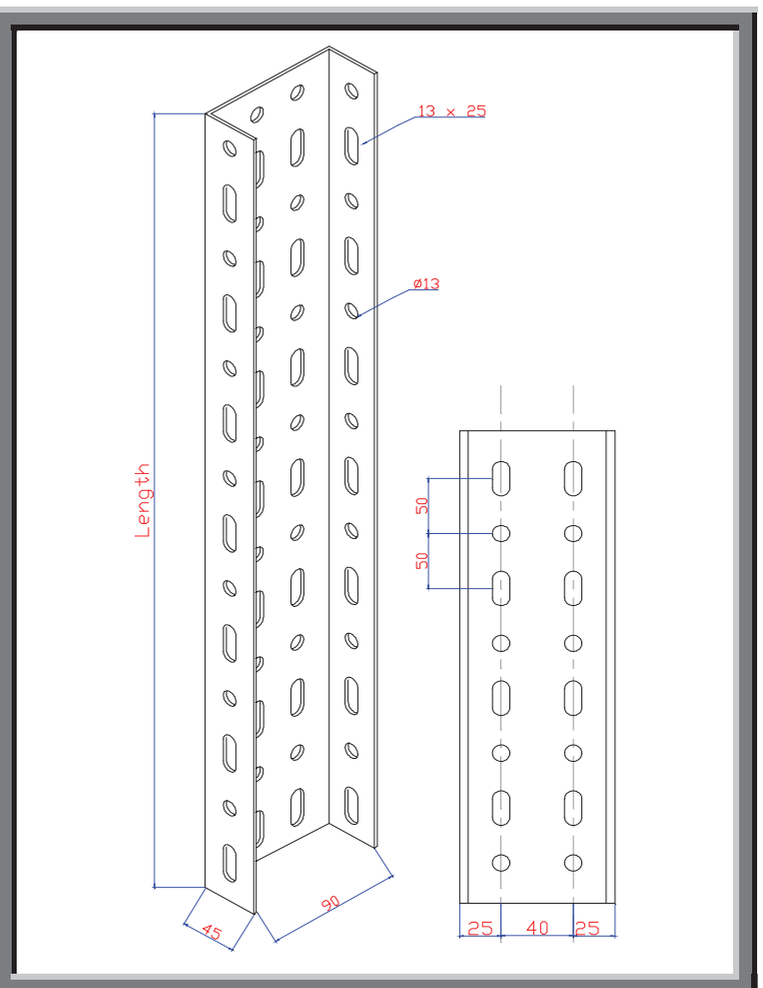

U – Channel 90x45 mm
thick 3 mm

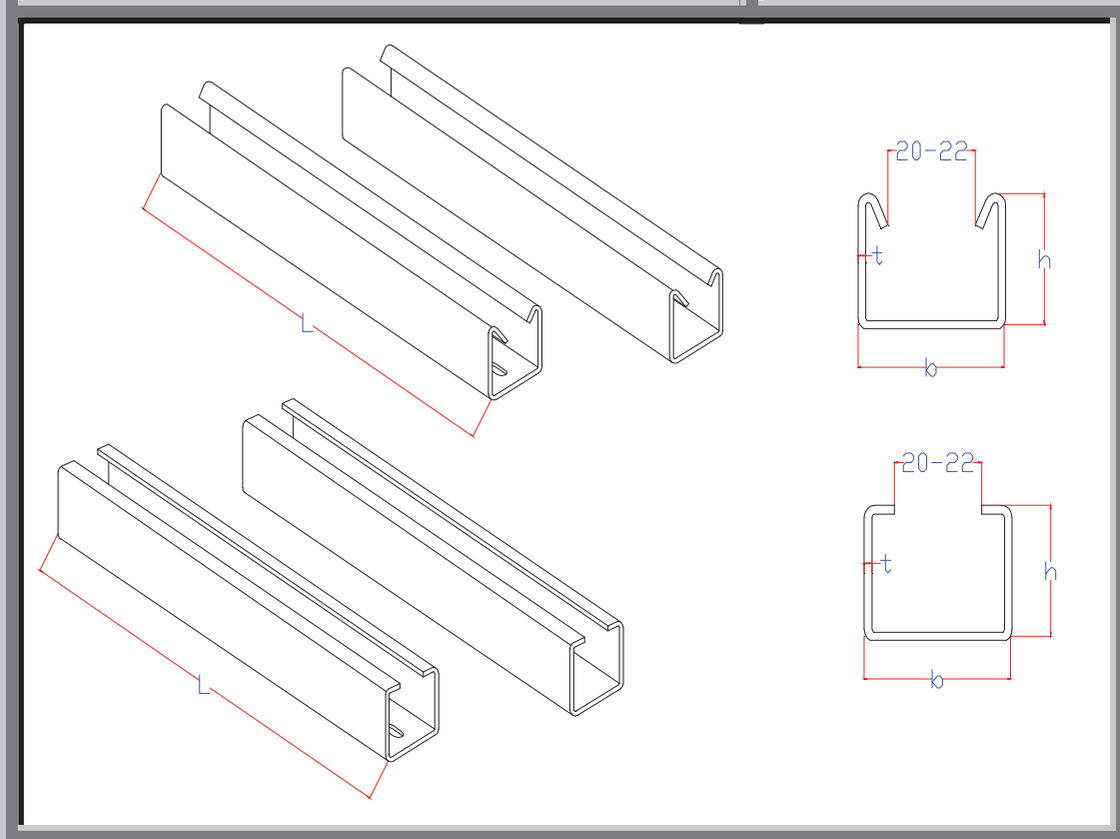

C - Channel

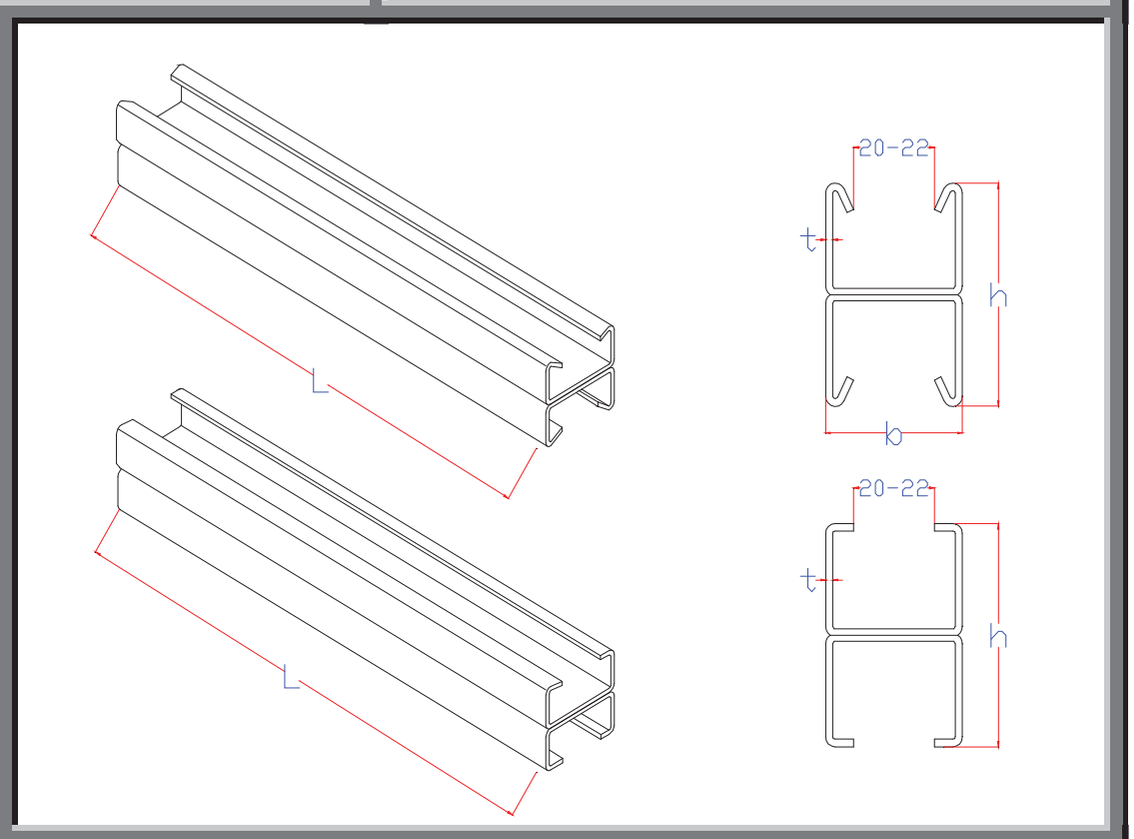

C – Channel (back to back)

Width (b)	Height (h)	Thick (mm)	Width (b)	Height (h)	Thick (mm)
40	20	1 & 1.5 & 2	40	40	1 & 1.5 & 2
40	40	2 & 3	40	80	2 & 3
50	35	2 & 3	50	70	2 & 3
50	50	2 & 3	50	100	2 & 3

Channel nut

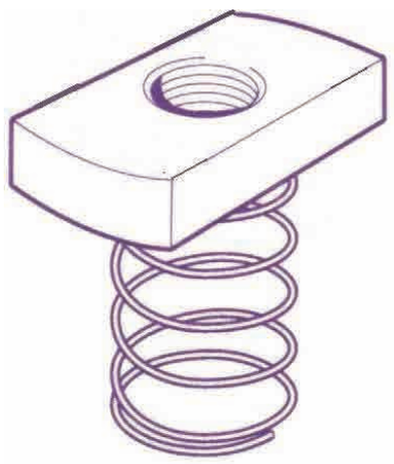

Long Spring

Short Spring

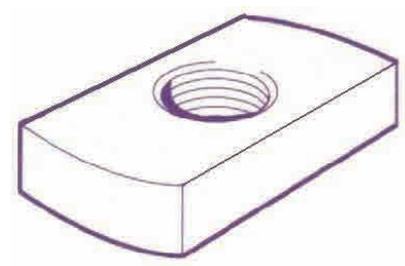

Channel nut

Brackets

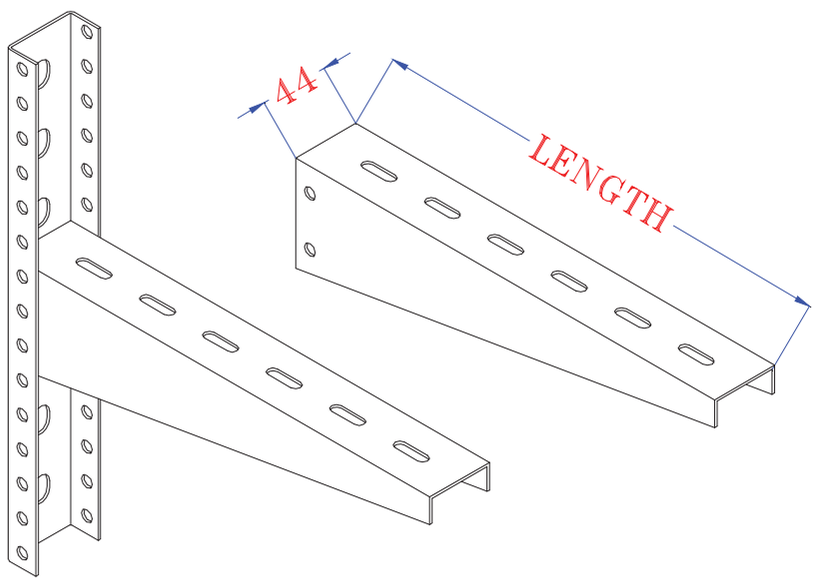

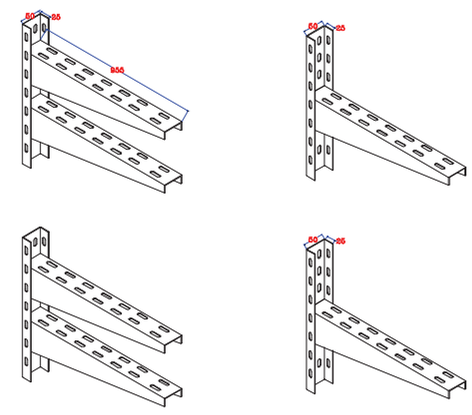

LENGTH : 100 & 200 & 300 & 400 & 500 & 600 mm

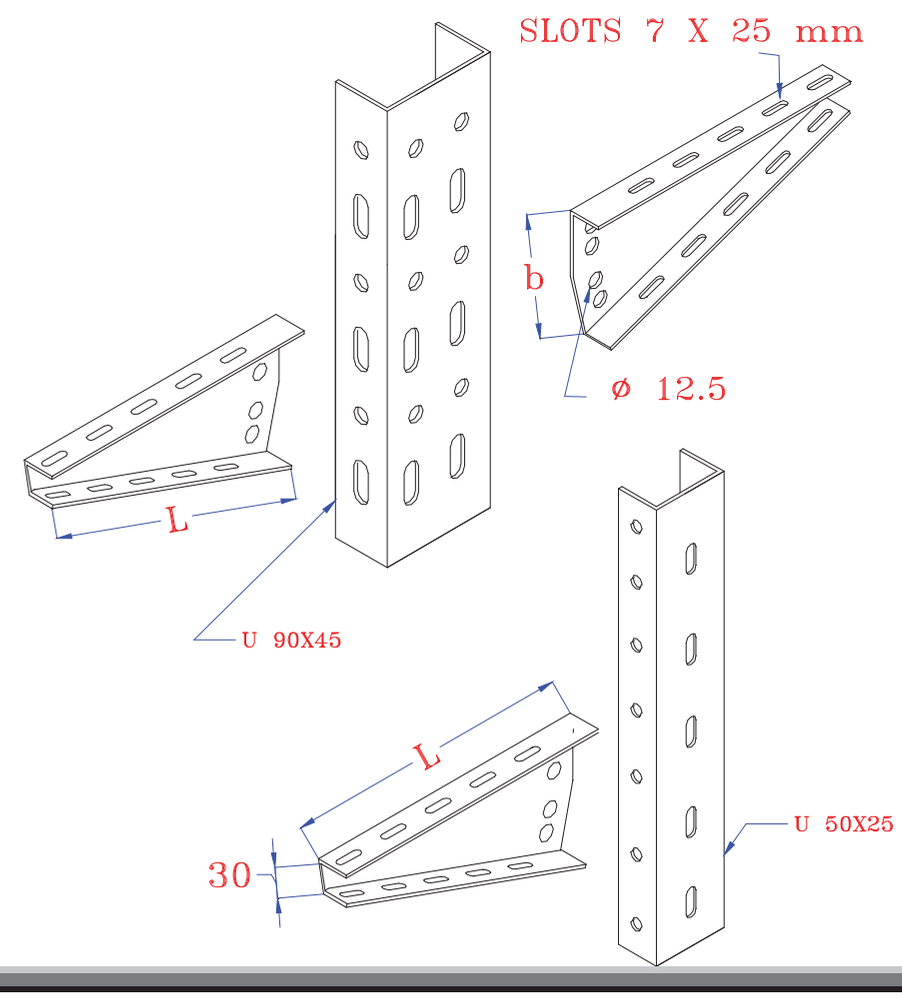

Steel beam clamp

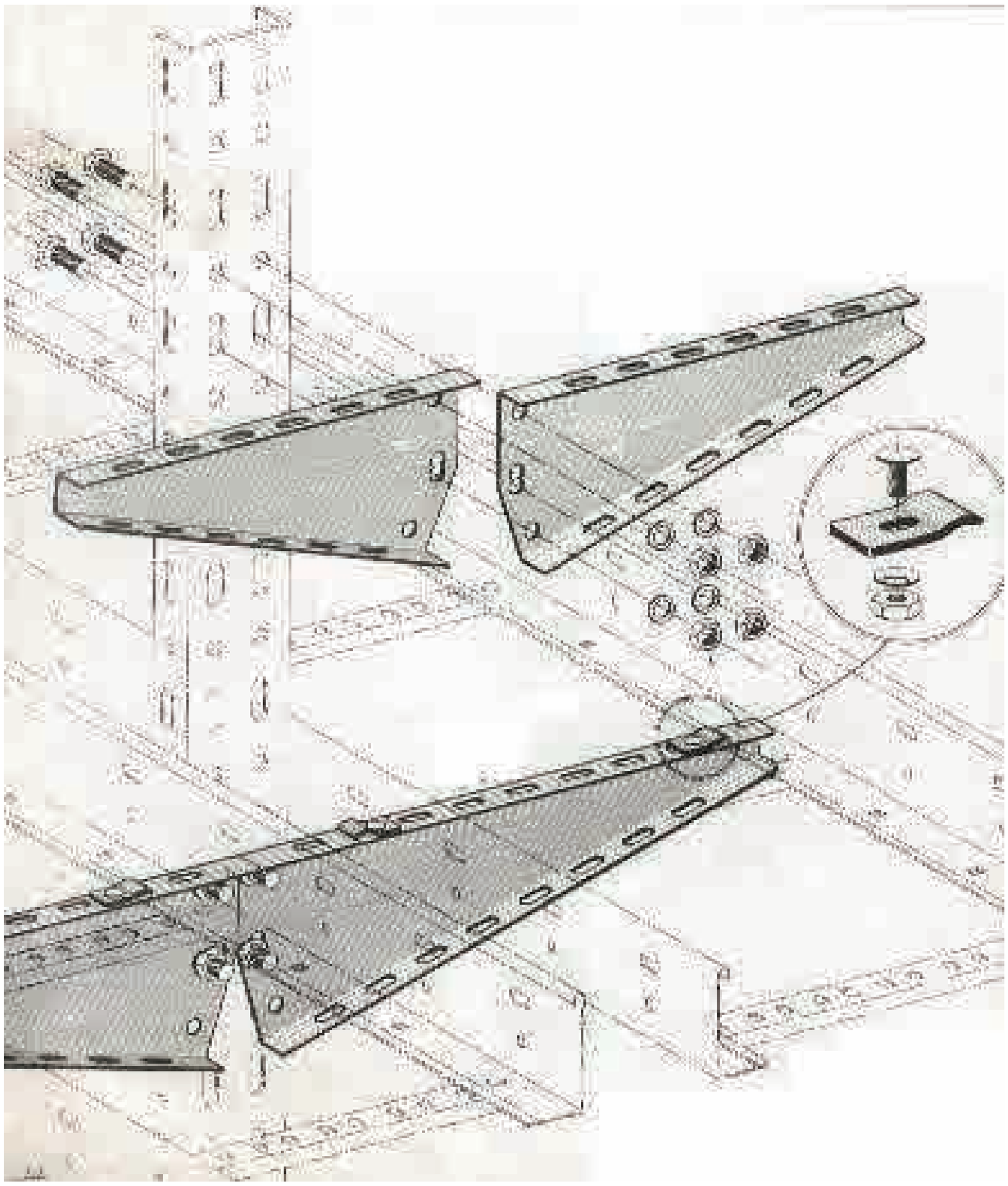

Fixing Ladder
on Brackets
With a clamp

ACCESORIOS

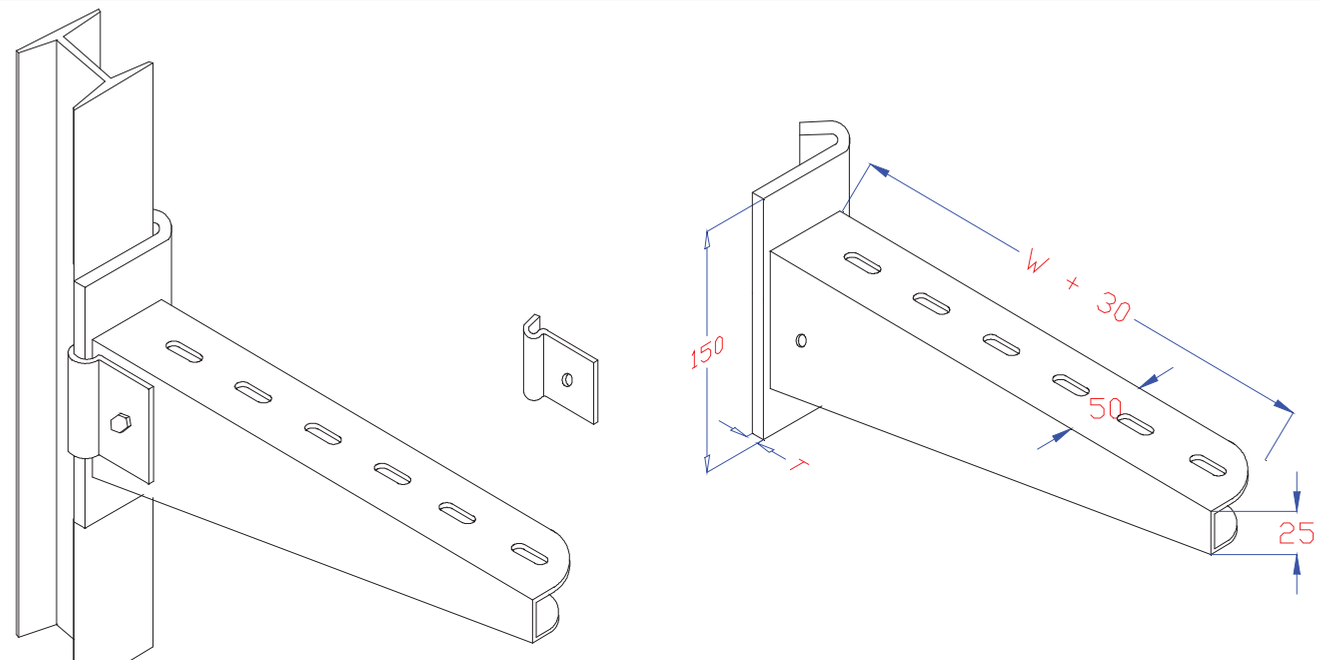

BACKET FOR MONTING I Beam

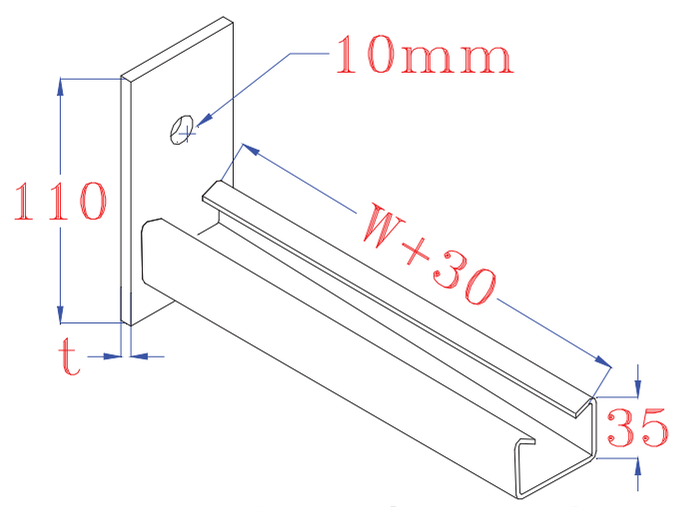

Length : 100 & 200 & 300 mm

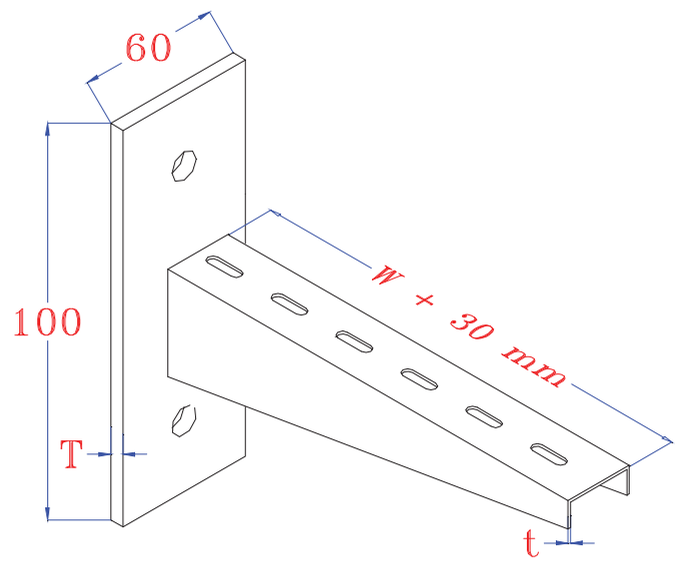

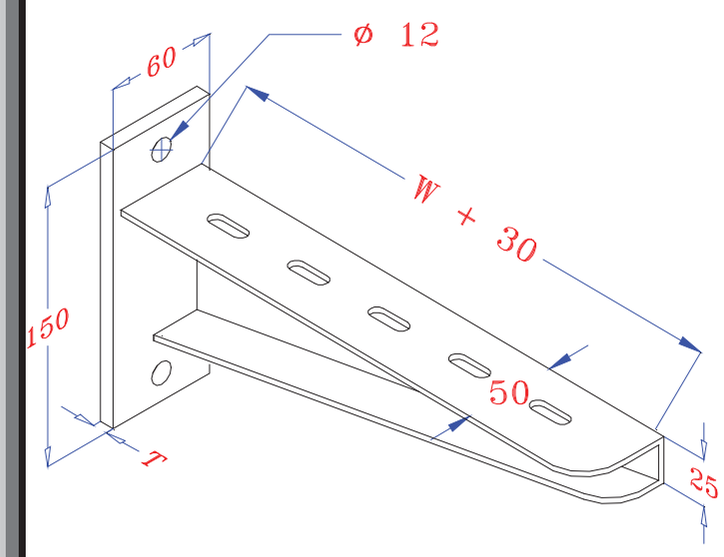

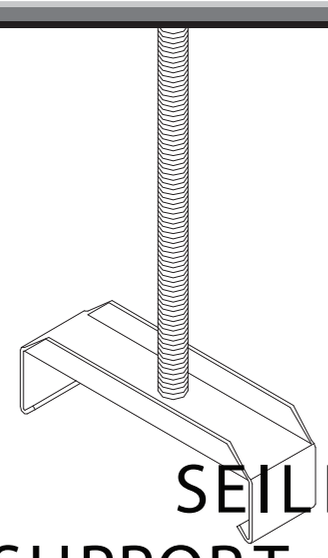

SEILNG SUPPORT with 50& 100& 200 c.t

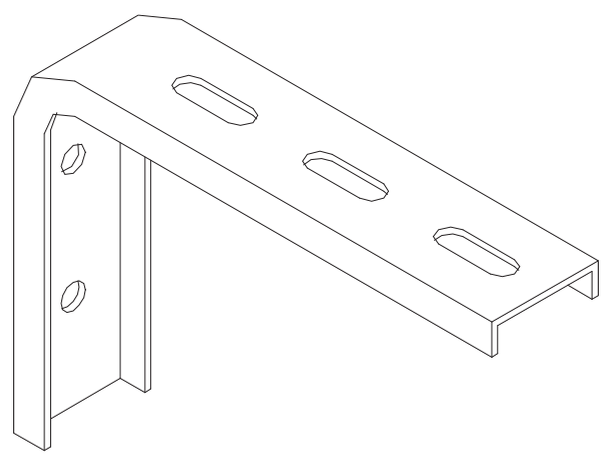

L – TYPE BRACKET with 50& 100& 200 c.t

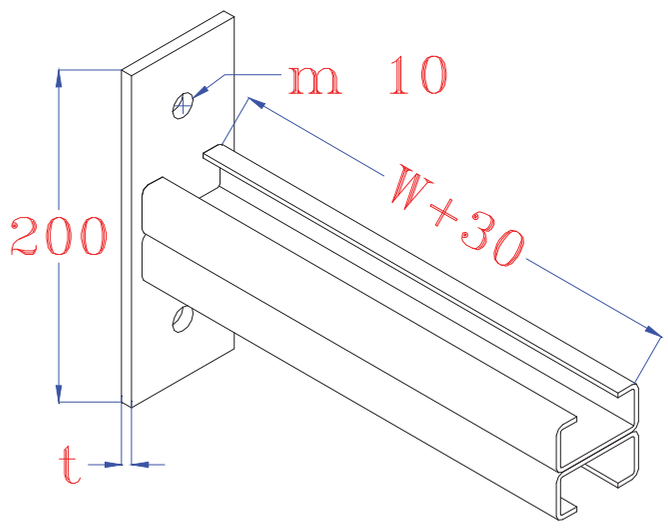

ACCESORIOS

Slotted Z & OMEGA

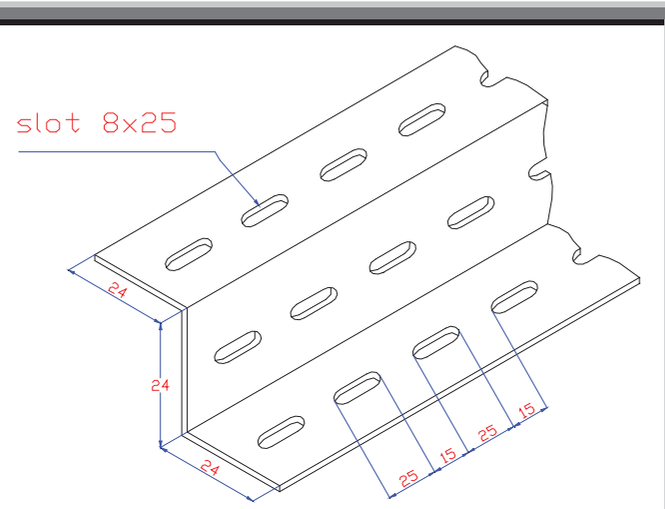

SIZE 24 X 24 mm

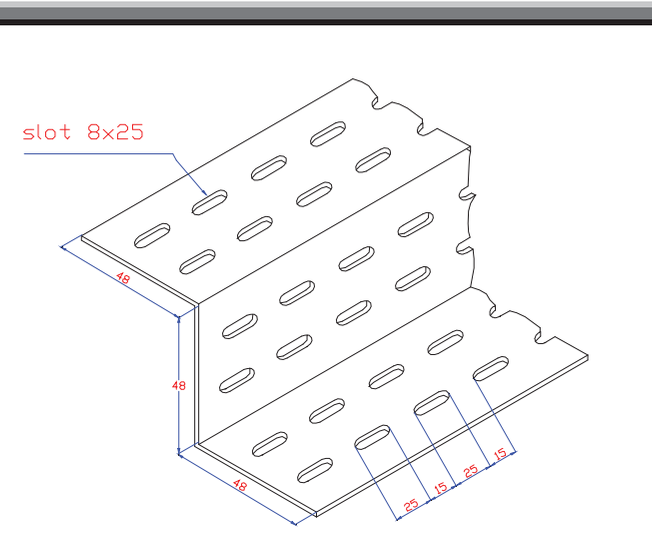

SIZE 48 X 48 mm

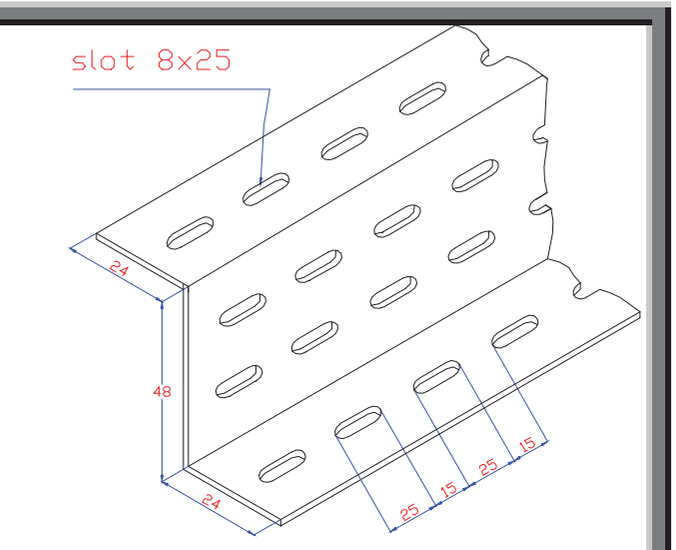

SIZE 24 X 48 mm

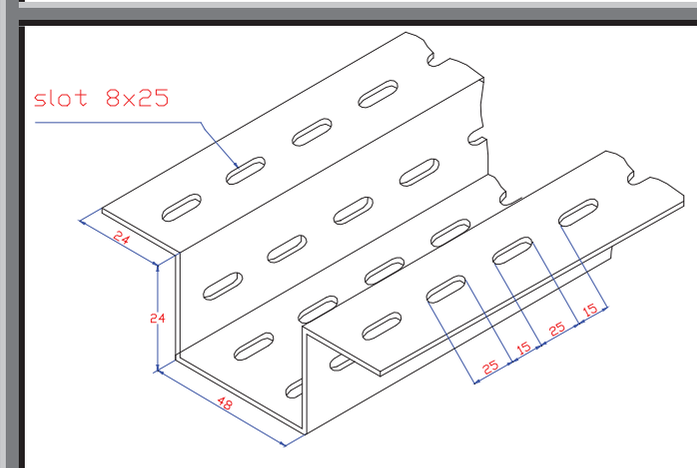

SIZE 24 X 48 mm

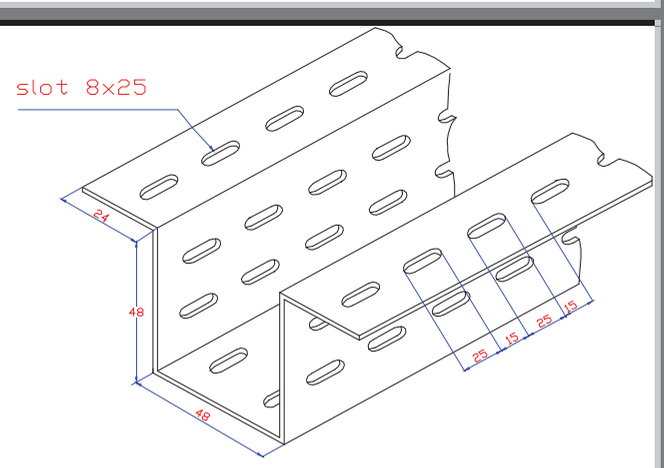

SIZE 48 X 48 mm

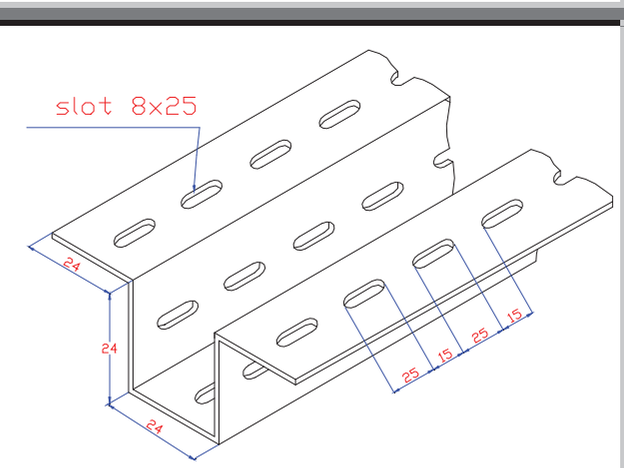

SIZE 24 X 24 mm

Slotted Angles

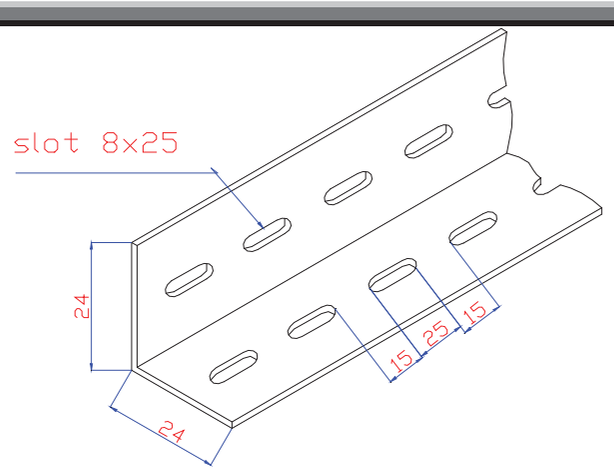

SIZE 24 X 24 mm

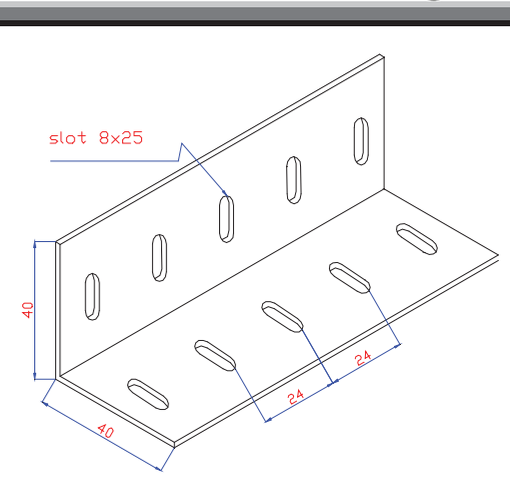

SIZE 40 X 40 mm

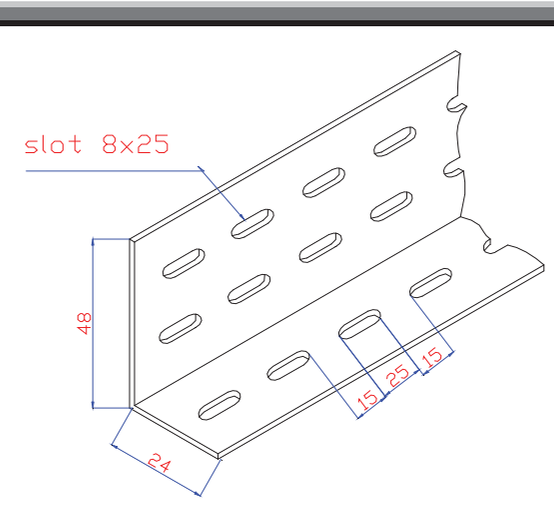

SIZE 48 X 24 mm

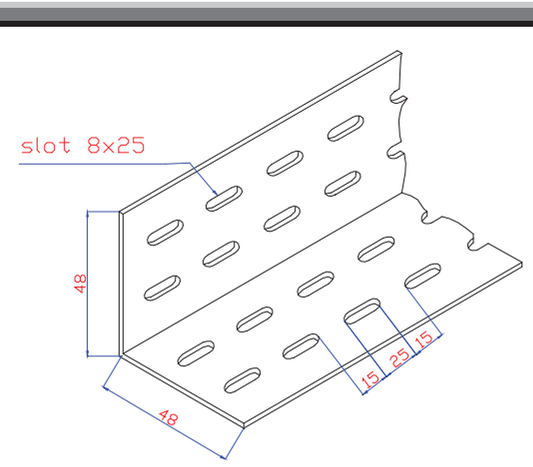

SIZE 48 X 48 mm

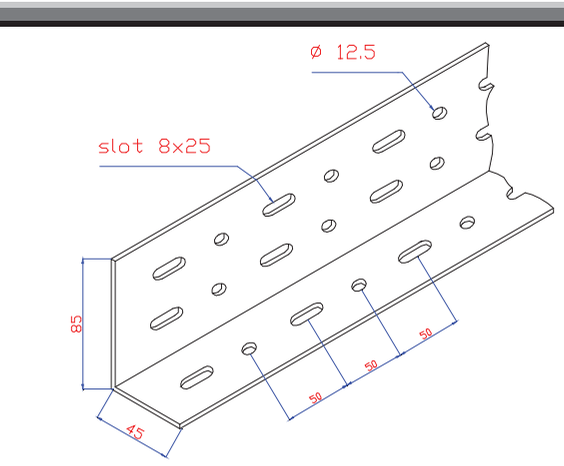

SIZE 85 X 45 mm

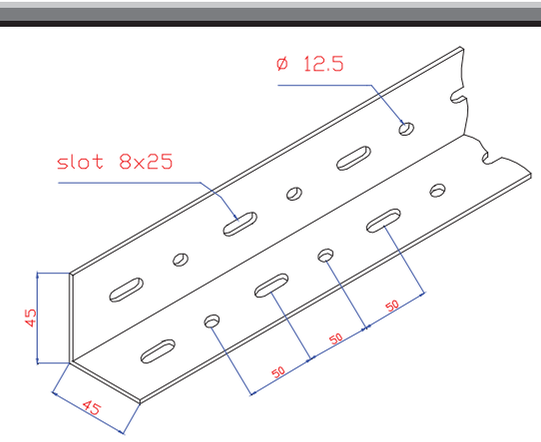

SIZE 45 X 45 mm

Head Plate

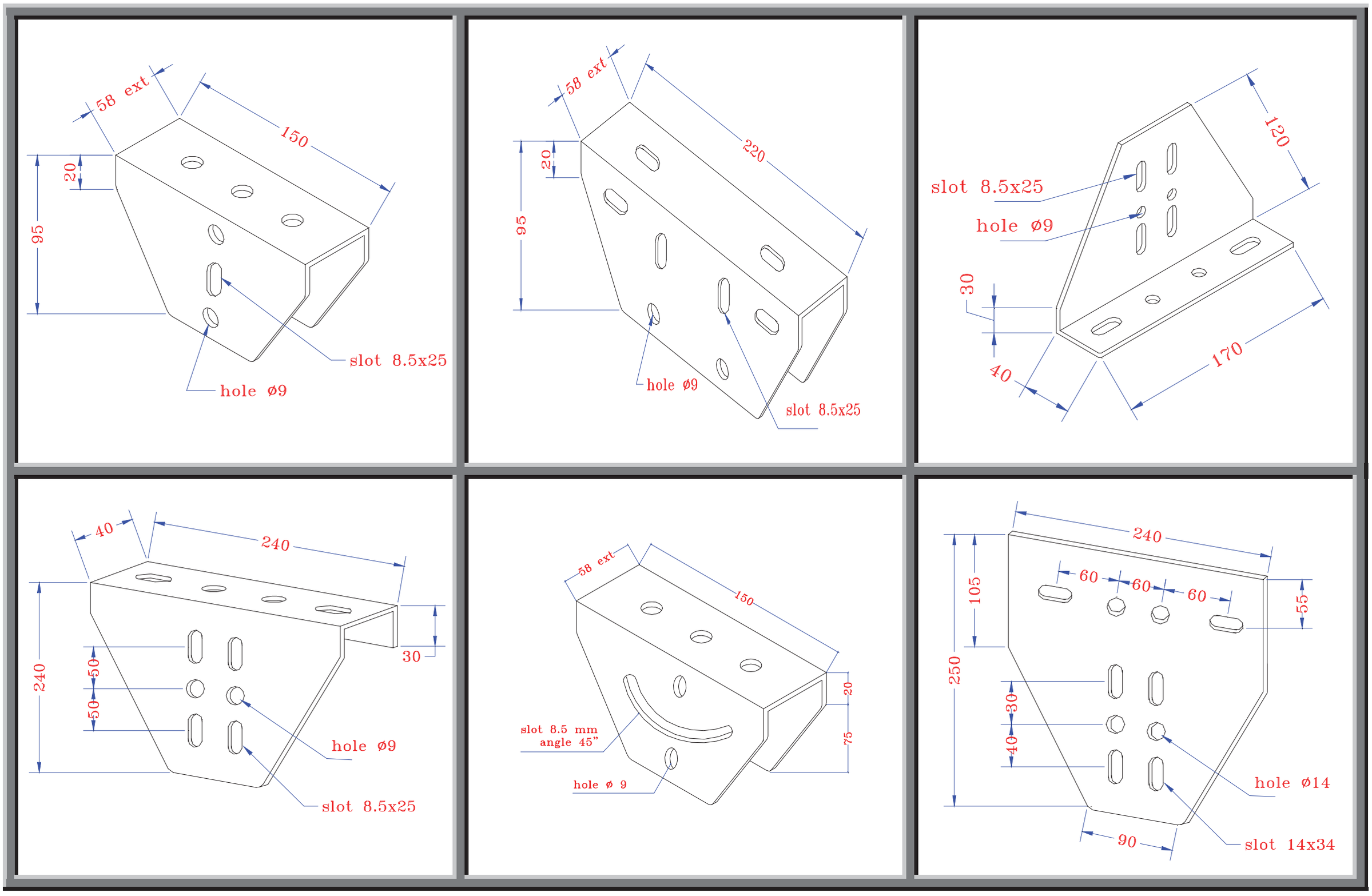
58 ext
150
20
95
slot 8.5x25
hole ø9
58 ext
220
20
95
hole ø9
slot 8.5x25
slot 8.5x25
hole ø9
120
30
40
170
40
240
240
50
50
30
hole ø9
slot 8.5x25
58 ext
150
20
75
slot 8.5 mm
angle 45"
hole ø 9
240
105
60
60
60
55
250
30
40
hole ø14
90
slot 14x34

ACCESORIOS

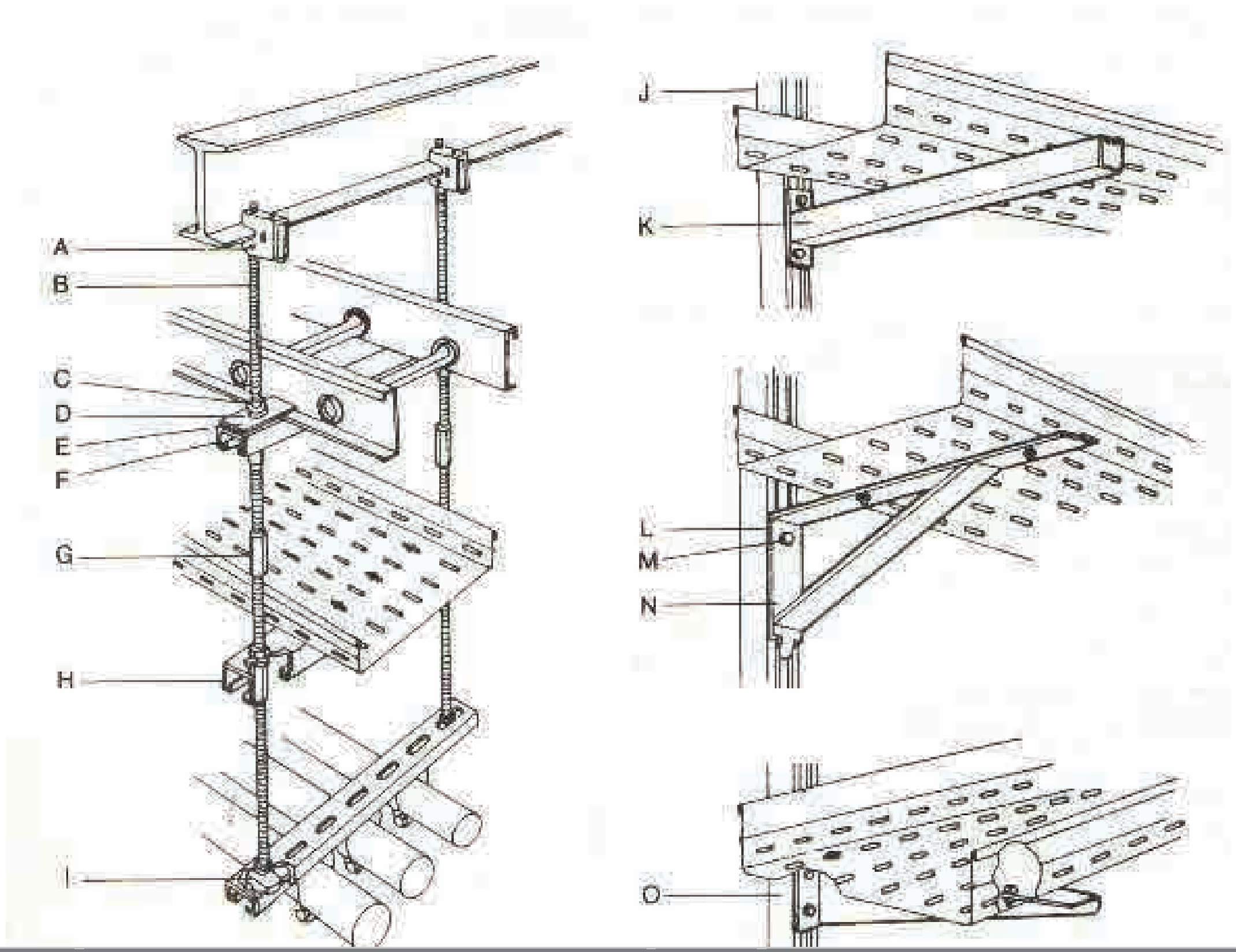

Item	description	Item	description
A	I – beam	H	Channel
B	Threaded Rod	I	Spring nut
C	Nut	J	Channel
D	Flat steel washer	K	Bracket
E	Hold down clamp	L	Spring nut
F	Channel	M	Hexagonal screw
G	Rod coupling	N	Bracket

ACCESORIOS

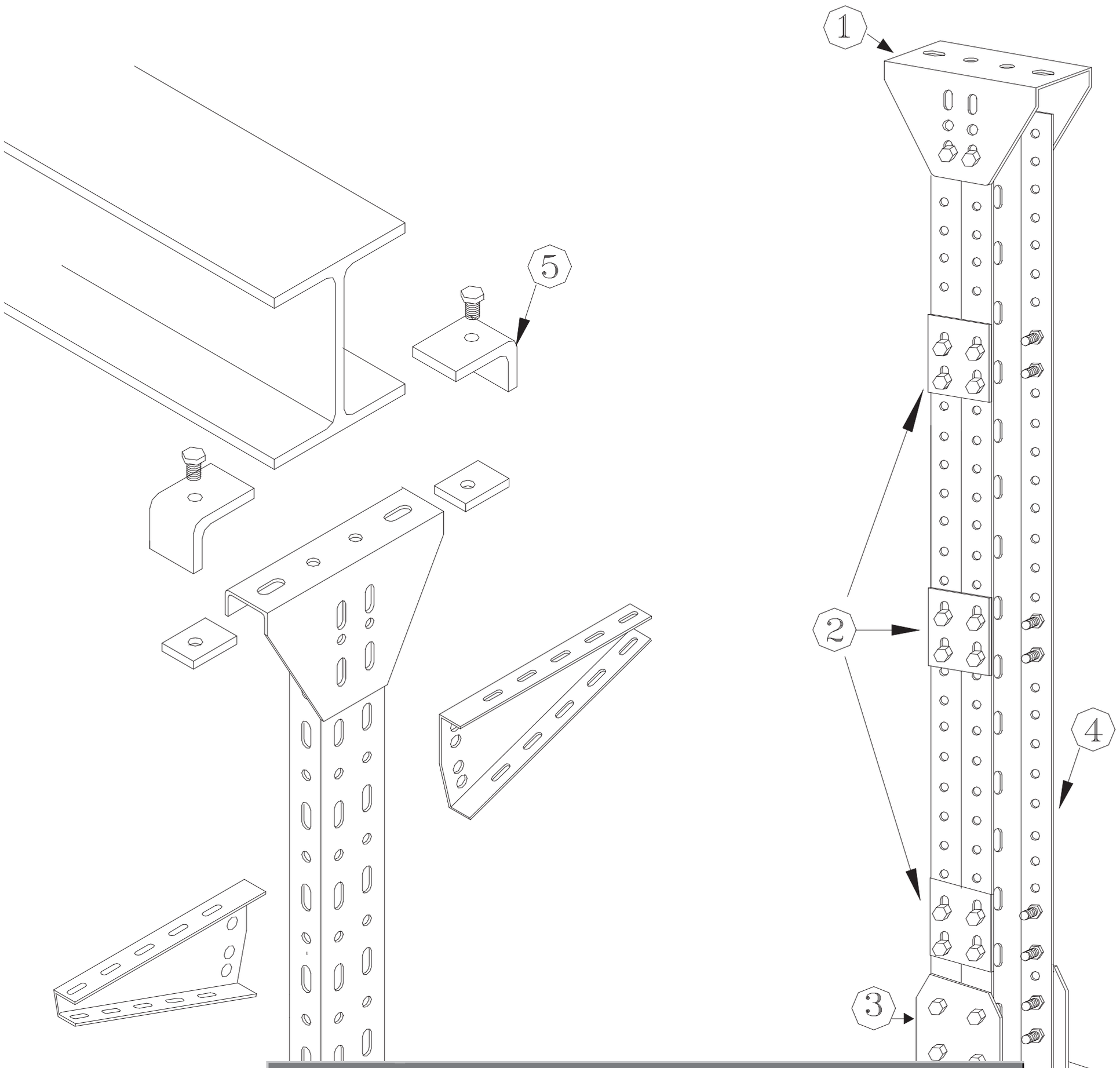

Item	description
1	Head plate
2	Joint plate
3	Foot
4	Double U – channel
5	I – beam clamp

TECHNICAL DATA

Normail Tray Height 50 mm 30
Normail Tray Height 75 mm 30
Normail Tray Height 100 mm 31
Flanged Tray Height 50 mm 31
Flanged Tray Height 75 mm 32
Flanged Tray Height 100 mm 32

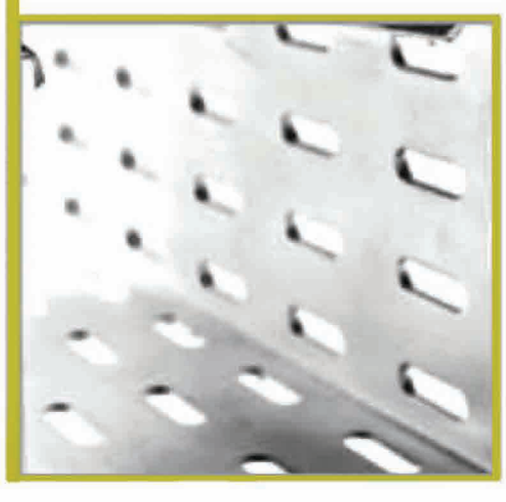

Normal Tray Height 50 mm

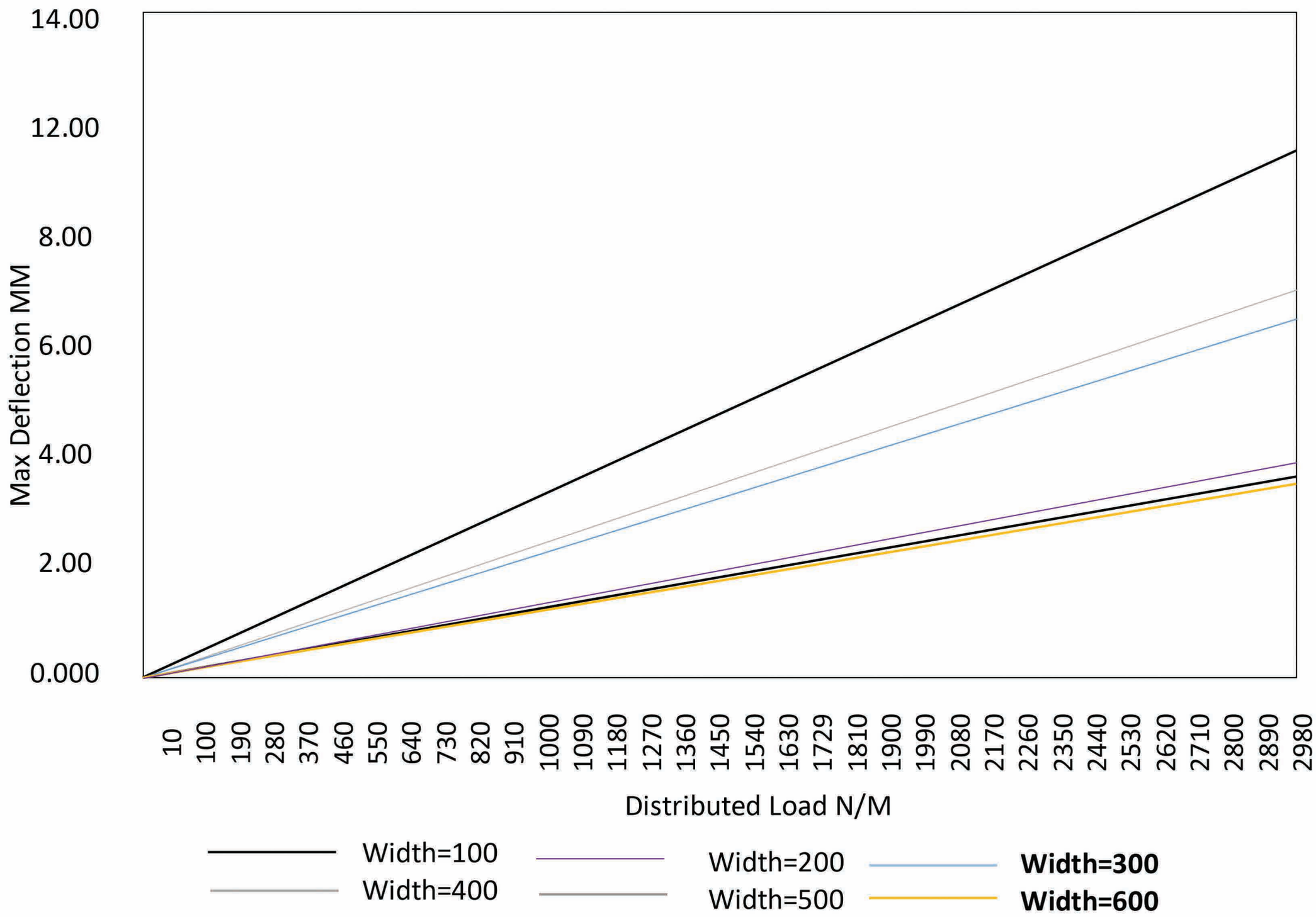

Normal Tray Height 75mm

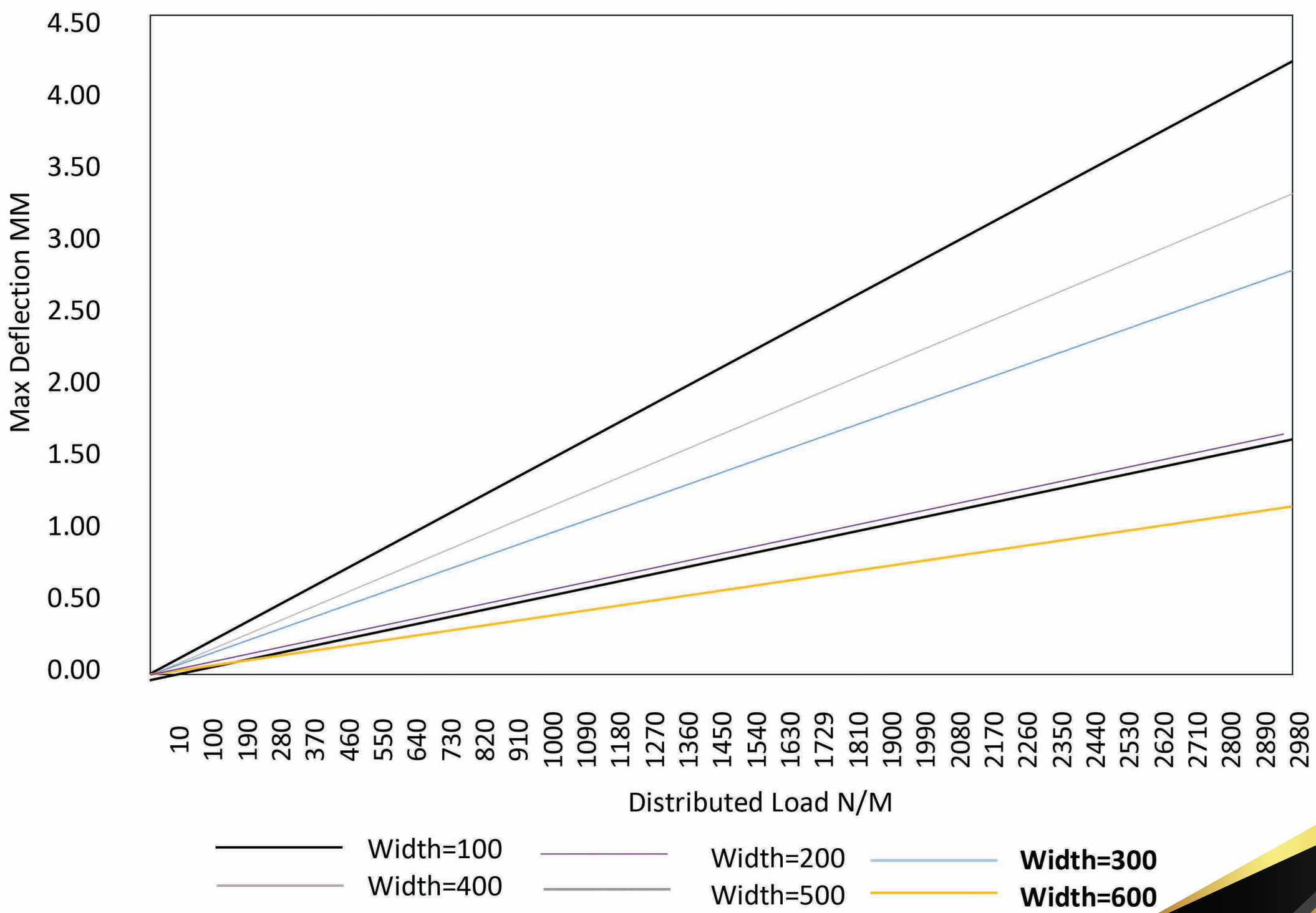

Normal Tray Height 100mm
Flanged Tray Height 50 mm

Normal Tray Height 100mm

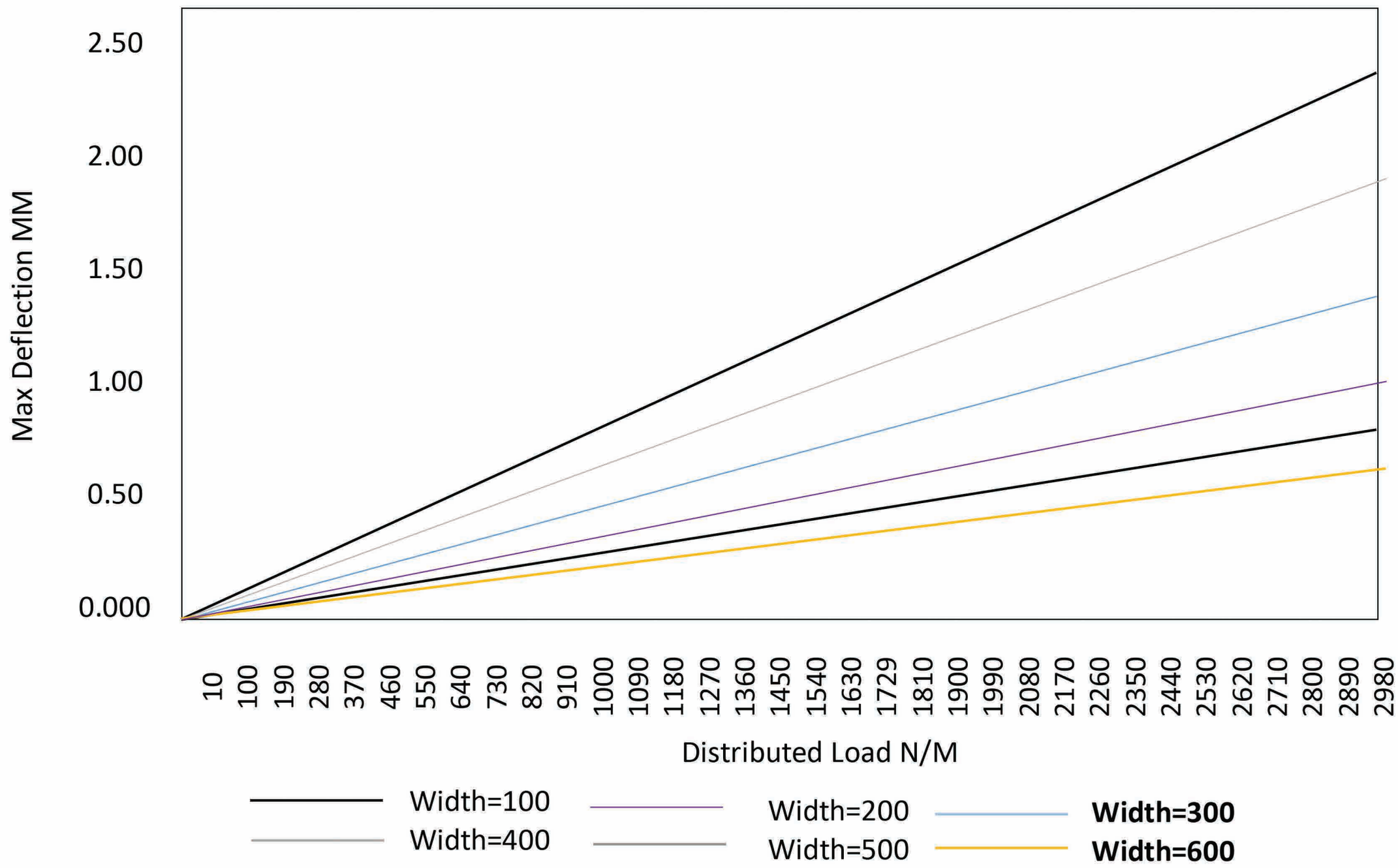

Flanged Tray Height 50 mm

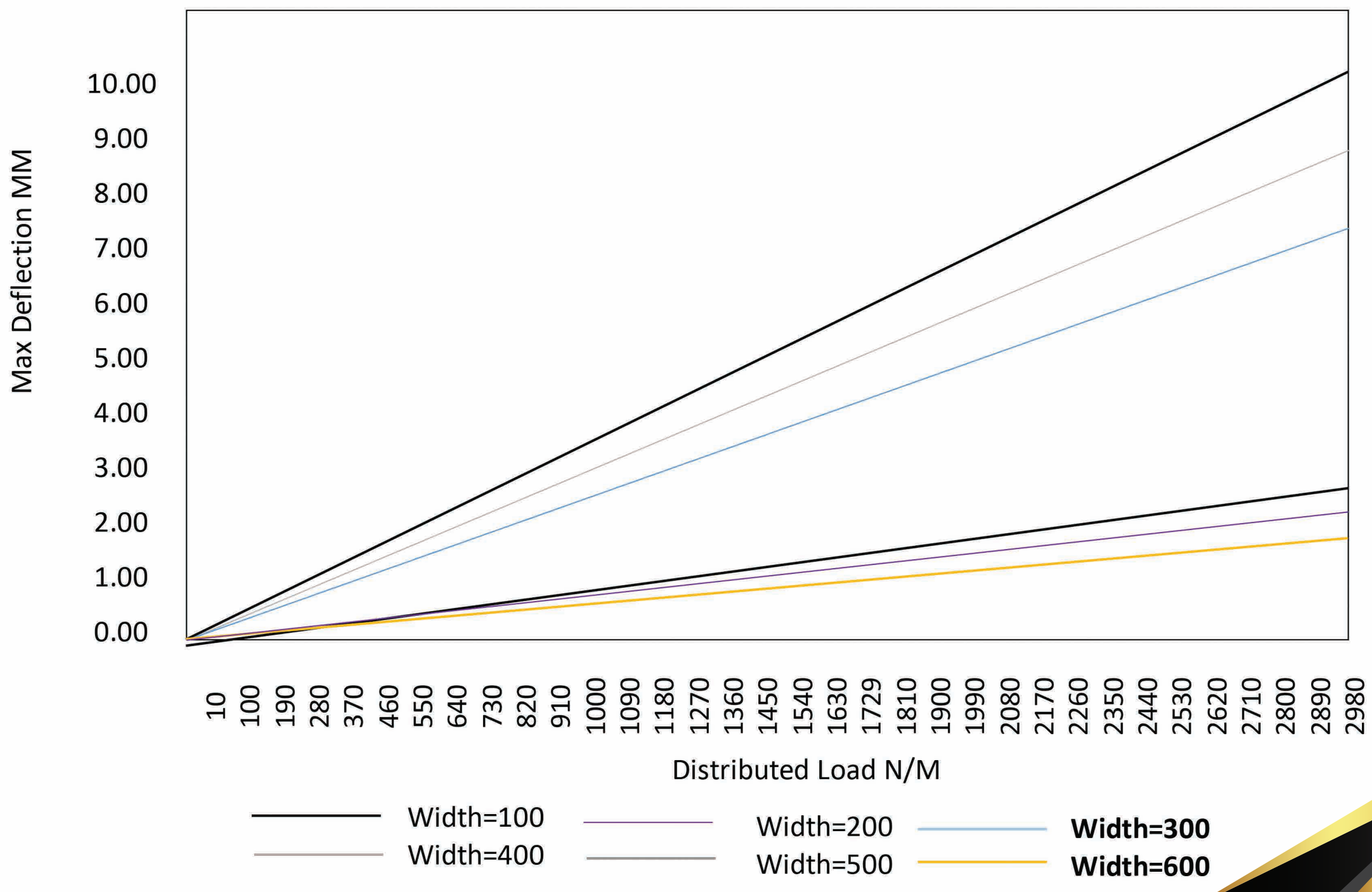

1-How to Choose Tray, Trunk or Ladder ?

A-Tray ?

* Is Suitable for most applications
* Provide easy cable laying and optimal protection of the cable
* Perforation ensure that the heat is discharged sufficiently

b-Trunk ?

- Provide easy cable laying
- imperforation ensure that the best protection of the cables
- suitable for cables with very low heat generation

c- Ladder

- Suitable for power cables for a higher degree of heat generation
- Suitable for types of cables outdoors or in areas with dirt occurrence

2- Side Height ?

- Depend on the cable size and cable type

3- Cross Section Area ?

- Determine the cross section areas of your cables within a square.
- Add the cross section areas of all the cables
- Add 25 % of future reserve
- Now you have the cross section area of the tray
- From the suitable height you can know the tray width

4- Support spacing ?

- It's the distance between two support point
- It's recommended to use standard support spacing 1.5 m
- From the loading diagram you can see the deflection

5- Surface treatment ?

- According to the atmosphere, place,……etc

CABLE TRAY CAPACITY WITH COVER

How to choose the tray according to the cables' diameter ?

4- core cable with standard copper conductor PVC insulated and Pvc sheathed 0.6/1 (1.2)KV			H= 50mm		H= 75mm		H= 100mm	
Nominal cross sectional area 4+..mm2	Approx. Overail diameter mm2	Approx. Weight Kg/m	Approx. No.of cables mm	Full load Approx. KN/m	Approx. No.of cables mm	Full load Approx. KN/m	Approx. No.of cables mm	Full load Approx. KN/m
Cable tray width =50mm								
6	16	0.43	3	0.01				
10	18.5	0.65	1	0.01				
16	20.9	0.91	1	0.01				
Cable Tray width =100mm								
6	16	0.43	9	0.04	10	0.43	10	0.04
10	18.5	0.65	7	0.05	6	0.39	6	0.04
16	20.9	0.91	5	0.05	6	0.55	6	0.05
35	25.1	1.65	3	0.05	5	0.83	5	1.10
50	29.3	2.23	2	0.04	3	0.67	3	0.07
70	32.9	3.07	2	0.06	3	0.92	3	0.09
95	37.8	4.18	1	0.08	3	1.25	3	0.13
120	41.2	5.21		0.05	1	0.52	1	0.05
150	45.9	6.40			1		1	0.06
185	50.7	7.96			1		1	0.08
240	57	10.33			1		1	0.10
Cable tray width= 150mm								
6	16	0.43	18	0.08	22	0.09	27	0.11
10	18.5	0.65	11	0.07	18	0.12	20	0.13
16	20.9	0.91	9	0.08	12	0.11	14	0.13
35	25.1	1.65	4	0.07	7	0.12	9	0.15
50	29.3	2.23	4	0.09	7	0.16	9	0.20
70	32.9	3.07	3	0.09	5	0.15	6	0.18
95	27.8	4.18	3	0.13	5	0.21	5	0.21
120	41.2	5.21	2	0.10	3	0.16	3	0.16
150	45.9	6.40			2	0.13	3	0.19
185	50.7	7.96			2	0.16	2	0.16
240	57	10.33			2	0.21	2	0.20
Cable tray width =200mm								
6	16	0.43	27	0.11	34	0.14	45	0.19
10	18.5	0.65	17	0.11	30	0.20	30	0.20
16	20.9	0.91		0.14	21	0.19	26	0.25
35	25.1	1.65	15	0.10	11	0.18	15	
50	29.3	2.23	6	0.11	9	0.20	12	
70	32.9	3.07	5	0.15	9	0.28	12	
95	27.8	4.18	5	0.17	7	0.29	7	
120	41.2	5.21	4	0.21	7	0.36	7	
150	45.9	6.40	4		3	0.19	5	
185	50.7	7.96			3	0.24	3	
240	57	10.33			1	0.21	2	
Cable tray width = 250mm								
6	16	0.43	36	0.15	46	0.20	63	
10	18.5	0.65	21	0.14	38	0.25	40	
16	20.9	0.91	19	0.17	27	0.25	34	
35	25.1	1.65	8	0.13	15	0.5	21	
50	29.3	2.23	7	0.16	13	0.29	18	
70	32.9	3.07	6	0.18	11	0.34	15	
95	27.8	4.18	6	0.25	11	0.46	11	
120	41.2	5.21	5	0.26	9	0.47	9	
150	45.9	6.40			4	0.26	7	
185	50.7	7.96			4	0.32	4	
240	57	10.33			3	0.31	3	

CABLE TRAY CAPACITY WITH COVER

How to choose the tray according to the cables' diameter ?

4- core cable with standard copper conductor PVC insulated and Pvc sheathed 0.6/1 (1.2)KV			H= 50mm		H= 75mm		H= 100mm	
Nominal cross sectional area 4+..mm2	Approx. Overail diameter mm2	Approx. Weight Kg/m	Approx. No.of cables mm	Full load Approx. KN/m	Approx. No.of cables mm	Full load Approx. KN/m	Approx. No.of cables mm	Full load Approx. KN/m
Cable tray width =300mm								
6	16	0.43	45	0.19	58	0.25	81	0.34
10	18.5	0.65	27	0.18	50	0.33	60	0.39
16	20.9	0.91	25	0.23	36	0.33	43	0.39
35	25.1	1.65	10	0.17	19	0.31	27	0.45
50	29.3	2.23	9	0.20	17	0.38	24	0.53
70	32.9	3.07	8	0.25	15	0.46	21	0.64
95	27.8	4.18	7	0.29	13	0.54	13	0.56
120	41.2	5.21	6	0.31	11	0.57	11	0.57
150	45.9	6.40			5	0.32	9	0.58
185	50.7	7.96			5	0.40	5	0.40
240	57	10.33			4	0.41	4	0.41
Cable tray width = 400mm								
6	16	0.43	66	0.28	82	0.35	117	0.50
10	18.5	0.65	39	0.25	74	0.48	85	0.55
16	20.9	0.91	33	0.30	48	0.44	62	0.56
35	25.1	1.65	14	0.23	27	0.45	39	0.64
50	29.3	2.23	12	0.27	23	0.51	33	0.73
70	32.9	3.07	11	0.34	21	0.64	30	0.92
95	27.8	4.18	9	0.38	17	0.71	17	0.71
120	41.2	5.21	8	0.42	15	0.78	15	0.78
150	45.9	6.40			8	0.51	15	0.96
185	50.7	7.96			7	0.56	7	0.56
240	57	10.33			6	0.62	6	0.62
Cable tray width =500mm								
6	16	0.43	84	0.36	110	0.47	159	0.68
10	18.5	0.65	49	0.32	94	0.61	115	0.75
16	20.9	0.91	43	0.39	63	0.57	82	0.75
35	25.1	1.65	18	0.30	35	0.58	51	0.84
50	29.3	2.23	16	0.36	31	0.69	45	1.00
70	32.9	3.07	14	0.43	27	0.83	39	1.20
95	27.8	4.18	12	0.50	23	0.96	23	0.96
120	41.2	5.21	11	0.57	21	1.09	21	1.09
150	45.9	6.40			10	0.64	19	1.22
185	50.7	7.96			9	0.72	9	0.72
240	57	10.33			8	0.83	8	0.83
Cable tray width = 600mm								
6	16	0.43	102	0.43	134	0.57	195	0.83
10	18.5	0.65	49	0.362	114	0.74	140	0.91
16	20.9	0.91	43	0.39	78	0.71	102	0.93
35	25.1	1.65	18	0.30	43	0.71	63	1.04
50	29.3	2.23	16	0.36	37	0.82	54	1.20
70	32.9	3.07	14	0.43	33	1.01	48	1.47
95	27.8	4.18	12	0.50	29	1.21	29	1.21
120	41.2	5.21	11	0.57	25	1.30	25	1.30
150	45.9	6.40			12	0.77	23	1.47
185	50.7	7.96			11	0.88	11	0.88
240	57	10.33			9	0.93	9	0.93

KING STEEL

الفرع الاول : ١٧ شارع سليمان الحلبى الدور الاول

الفرع الثانى : ١٤ شارع عماد الدين وسط البلد القاهرة

المصنع : قليوب - الطريق البطئ - شارع فايز عبيد - بجوار غبور

الادارة : ٤ شارع سراى الازبكية - مبنى سينما كايرو - وسط البلد - القاهرة

موبايل : ٠١١١٦٤٤٤٢٣ - ٠١٢٢٢٣٧٣١٧١ - ٠١٢٢٧٠٨٣٠٥٥ - ٠١٠٠٠٤٤٤٥٠٢

تليفون : ٠٢٢٥٧٨٤٣١٩

www.kingsteelegypt.com